EANCOM® 2002 S3

IFCSUM

Forwarding and consolidation summary message

Edition 2016

1. Introduction 2
2. Message Structure Chart 4
3. Branching Diagram 7
4. Segments Description 17
5. Segments Layout 25
6. Example(s) 132

1. Introduction

Status

MESSAGE TYPE : IFCSUM

REFERENCE DIRECTORY : D.01B

EANCOM® SUBSET VERSION : 004

Definition

A message from the party issuing either an instruction or a booking regarding forwarding/transport services for a collection of consignments under conditions agreed, to the party arranging the forwarding and/or transport services. The IFCSUM message can also be used as an arrival notice for multiple consignments.

Principles

This message should not be used to instruct the despatch of products. The 'Instruction To Despatch (INSDES)' message should be used for this purpose.

The instruction results in a transport contract for multiple consignments and is primarily meant for administrative purposes. It will be the message from shipper to carrier or forwarder containing the final details of the consignments for which services are provided. The instruction message is the one and only message which results in the actual contract which can either be a document or an electronic contract.

If only one message will suffice in an exchange between a shipper and a carrier/forwarder to convey the information related to multiple consignments then the instruction message should be the one as this message is the only message that results in a contract.

IFCSUM focuses on separate business areas in transport where the view on the operations is transport means or equipment oriented rather than consignment oriented. The IFCSUM provides a statement for a means of transport or equipment regarding the consignments carried. The IFCSUM message also provides a means to incorporate the control and auditability information needed for the receiver of the message to perform the operation to be carried out.

IFCSUM can be used in the distribution industry as the description of all consignments to be collected together at one location and to be delivered to possibly different locations

The message provides information concerning cargo carried specifying the details regarding carrier, mode of transport, means of transport, equipment and the necessary details of the consignments.

In addition to the main principles detailed above, a number of general principles also apply;

The IFCSUM message may contain one or many consignments.

- A consignment may contain several goods items.
- A consignment is identified by a consignors reference number (code CU) in the CNI segment.
- Goods items may or may not be containerised.
- Goods items may be transported in one or more containers, and a single container may contain one or more goods items.
- One goods item may be related to one or more customs tariff codes.
- Goods items related to one customs tariff code may be carried in one or more containers.
- Transport devices, which have the ability of powered movement on their own, are specified in the transport details group. Other load or transport devices are specified as equipment.
- Packaging for goods items can be expressed at up to three levels.
- A goods item consists of one or more despatch units that adhere to the same package type and goods

1. Introduction

description.

- A despatch unit is the unit of cargo that will be handled and to which an SSCC can be affixed.

The IFCSUM message can also be used as an arrival notice.

A number of generic transport terms are used in this specification, to be described as:

CONSIGNEE
the organisation (party) which has the intention to receive the goods.

CONSIGNOR
the party ordering transport, orders a carrier to collect goods for transportation.

CONSIGNMENT
a collection of goods items to be transported from one or many despatch locations to one or many delivery locations. (synonym: shipment).

CARRIER
the party contracted by the consignor or forwarder to transport goods.

DESPATCH LOCATION
the physical location from which goods for transport are shipped.

DELIVERY LOCATION
the physical location to which goods for transport are finally delivered.

EQUIPMENT
material resources necessary to facilitate the transport and handling of cargo. Transport equipment does under the given circumstances not have the ability to move by its own propulsion (e.g. sea container, trailer, unit load device, pallet).

FORWARDER
the party contracted by the consignor to arrange to have the goods transported.

GOODS ITEM
a collection of products normally grouped together for transport purposes, e.g. 12 pallets of foodstuffs.

LINE ITEM
a specific product identified and defined for **trade** purposes, e.g. a case of flour containing 24 packets of 250 grams.

MODE OF TRANSPORT
the method of transport used for the conveyance of goods or persons, e.g. by rail, by road, by sea.

MEANS OF TRANSPORT
the vehicle used for the transport of goods or persons, e.g. aircraft, truck, vessel.

PLACE OF ACCEPTANCE
the place at which the responsibility of the carrier starts.

PLACE OF DELIVERY
the place at which the responsibility of the carrier ends.

TYPE OF MEANS OF TRANSPORT
the type of vehicle used in the transport process, e.g. wide body, tank truck, passenger vessel.

TYPE OF EQUIPMENT
the type of material used, e.g. 40 feet container, four way pallet, mafi trailer.

2. Message Structure Chart

Forwarding And Consolidation Summary Heading Section

UNH		1	M	1	- Message header
BGM		2	M	1	- Beginning of message
DTM		3	C	9	- Date/time/period
FTX		4	C	99	- Free text
CNT		5	C	9	- Control total
SG1			C	9	- RFF-DTM
RFF		6	M	1	- Reference
DTM		7	C	9	- Date/time/period
SG4			C	9	- NAD
NAD		8	M	1	- Name and address
SG7			C	9	- TCC-CUX
TCC		9	M	1	- Charge/rate calculations
CUX		10	C	1	- Currencies
SG9	*		C	9	- TDT-TSR-SG10-SG16
TDT		11	M	1	- Details of transport
TSR		12	C	9	- Transport service requirements
SG10			C	9	- LOC-DTM
LOC		13	M	1	- Place/location identification
DTM		14	C	9	- Date/time/period
SG16			C	9	- NAD-LOC-SG17-SG18
NAD		15	M	1	- Name and address
LOC		16	C	9	- Place/location identification
SG17			C	9	- CTA-COM
CTA		17	M	1	- Contact information
COM		18	C	9	- Communication contact
SG18			C	9	- DOC-DTM
DOC		19	M	1	- Document/message details
DTM		20	C	1	- Date/time/period
SG21			C	999	- EQD-EQN-SEL-NAD
EQD		21	M	1	- Equipment details
EQN		22	C	1	- Number of units
SEL		23	C	9	- Seal number
NAD		24	C	9	- Name and address
SG25			C	9999	- CNI-DTM-CNT-TSR-MOA-FTX-SG31-SG32-SG33-SG38-SG43-SG5
CNI		25	M	1	- Consignment information
DTM		26	C	9	- Date/time/period
CNT		27	C	9	- Control total
TSR		28	C	9	- Transport service requirements
MOA		29	C	99	- Monetary amount
FTX		30	C	99	- Free text
SG31			C	2	- TOD-LOC
TOD		31	M	1	- Terms of delivery or transport
LOC		32	C	9	- Place/location identification
SG32			C	999	- RFF-DTM
RFF		33	M	1	- Reference
DTM		34	C	9	- Date/time/period
SG33	+		C	9	- GOR-DTM-LOC-SEL-FTX-SG34
GOR	+	35	M	1	- Governmental requirements
DTM	+	36	C	9	- Date/time/period
LOC	+	37	C	9	- Place/location identification
SEL	+	38	C	9	- Seal number
FTX	+	39	C	9	- Free text
SG34	+		C	9	- DOC-DTM
DOC	+	40	M	1	- Document/message details
DTM	+	41	C	1	- Date/time/period
SG38	+		C	99	- TDT-DTM-SG39-SG40
TDT	+	42	M	1	- Details of transport

2. Message Structure Chart

DTM	+	43	C	9	- Date/time/period
SG39	+		C	99	- LOC-DTM
LOC	+	44	M	1	- Place/location identification
DTM	+	45	C	9	- Date/time/period
SG40	+		C	9	- RFF-DTM
RFF	+	46	M	1	- Reference
DTM	+	47	C	1	- Date/time/period
SG43	*		C	99	- NAD-LOC-MOA-SG44-SG45-SG47
NAD		48	M	1	- Name and address
LOC		49	C	9	- Place/location identification
MOA	+	50	C	9	- Monetary amount
SG44			C	9	- CTA-COM
CTA		51	M	1	- Contact information
COM		52	C	9	- Communication contact
SG45			C	9	- DOC-DTM
DOC		53	M	1	- Document/message details
DTM		54	C	1	- Date/time/period
SG47			C	9	- RFF
RFF		55	M	1	- Reference

Forwarding and Consolidation Detail Section

SG50	*		C	999	- GID-HAN-TMP-RNG-MOA-PIA-FTX-SG51-GDS-SG52-SG53-SG54-
GID		56	M	1	- Goods item details
HAN		57	C	1	- Handling instructions
TMP		58	C	1	- Temperature
RNG		59	C	1	- Range details
MOA		60	C	9	- Monetary amount
PIA		61	C	9	- Additional product id
FTX		62	C	9	- Free text
SG51			C	9	- NAD-DTM
NAD		63	M	1	- Name and address
DTM		64	C	1	- Date/time/period
GDS	+	65	C	9	- Nature of cargo
SG52			C	99	- MEA-EQN
MEA		66	M	1	- Measurements
EQN		67	C	1	- Number of units
SG53			C	99	- DIM-EQN
DIM		68	M	1	- Dimensions
EQN		69	C	1	- Number of units
SG54			C	9	- RFF-DTM
RFF		70	M	1	- Reference
DTM		71	C	9	- Date/time/period
SG55			C	999	- PCI-GIN
PCI		72	M	1	- Package identification
GIN		73	C	9	- Goods identity number
SG56			C	9	- DOC-DTM
DOC		74	M	1	- Document/message details
DTM		75	C	9	- Date/time/period
SG61			C	999	- SGP
SGP		76	M	1	- Split goods placement
SG65			C	99	- DGS-FTX-SG66-SG67
DGS		77	M	1	- Dangerous goods
FTX		78	C	99	- Free text
SG66			C	9	- CTA-COM
CTA		79	M	1	- Contact information
COM		80	C	9	- Communication contact
SG67			C	9	- MEA-EQN
MEA		81	M	1	- Measurements
EQN		82	C	1	- Number of units

2. Message Structure Chart

SG70		C	999	- EQD-EQN-MEA-DIM-SEL-SG72
EQD	83	M	1	- Equipment details
EQN	84	C	1	- Number of units
MEA	85	C	9	- Measurements
DIM	86	C	9	- Dimensions
SEL	87	C	99	- Seal number
SG72		C	9	- NAD
NAD	88	M	1	- Name and address

Forwarding And Consolidation Summary Section

UNT	89	M	1	- Message trailer

3. Branching Diagram

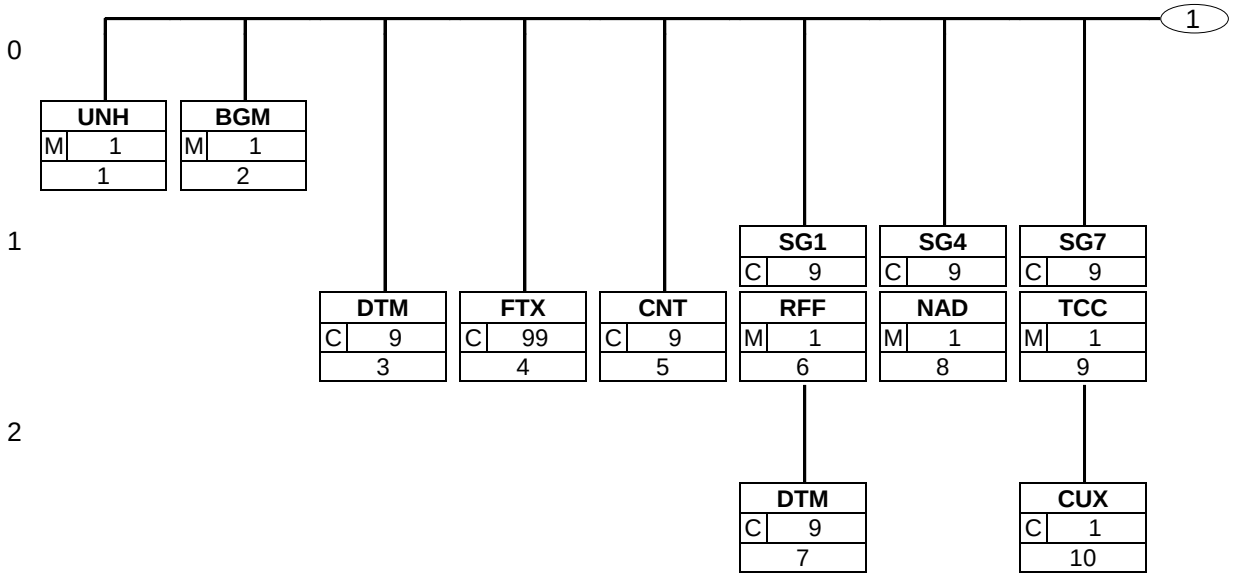

3. Branching Diagram

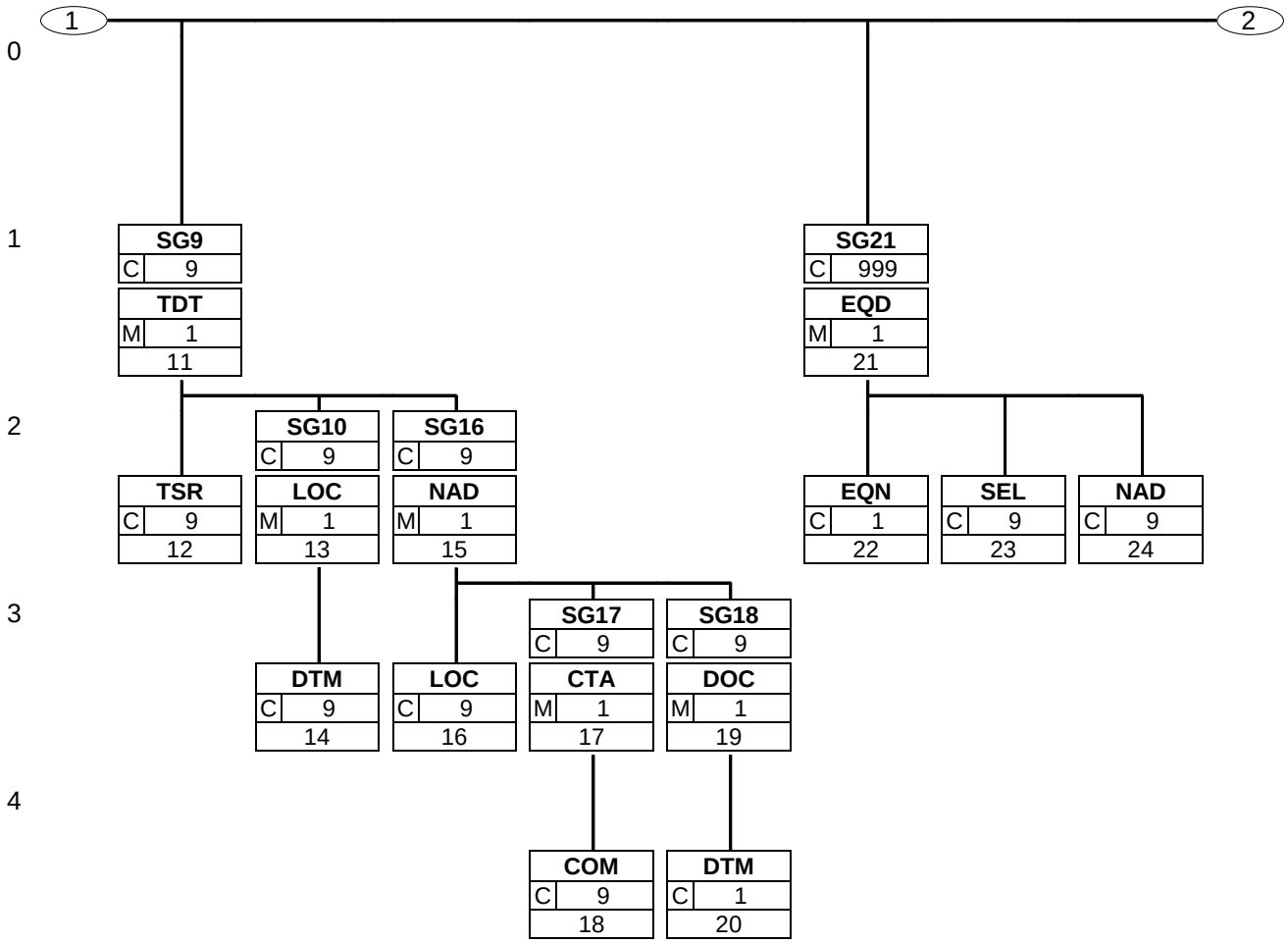

3. Branching Diagram

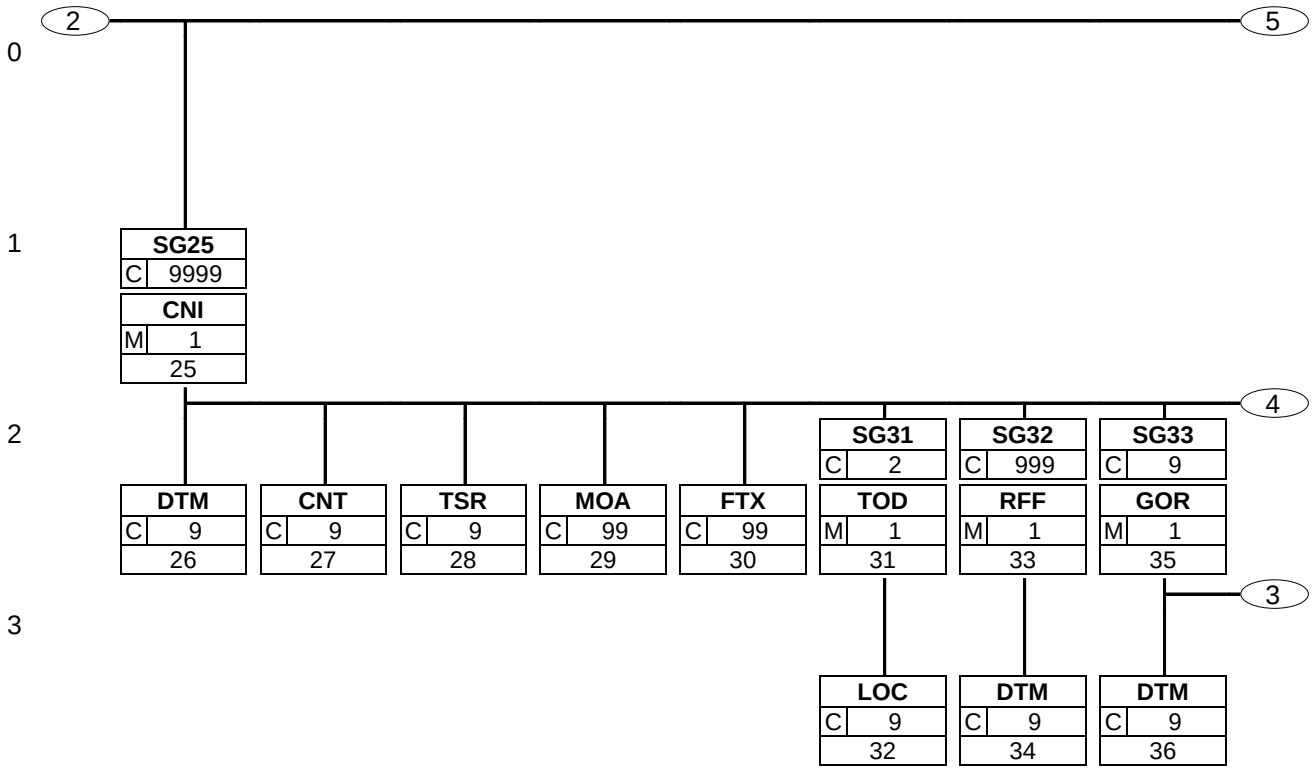

3. Branching Diagram

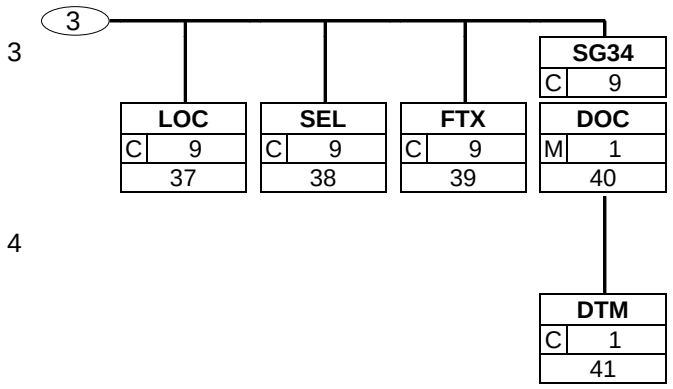

3. Branching Diagram

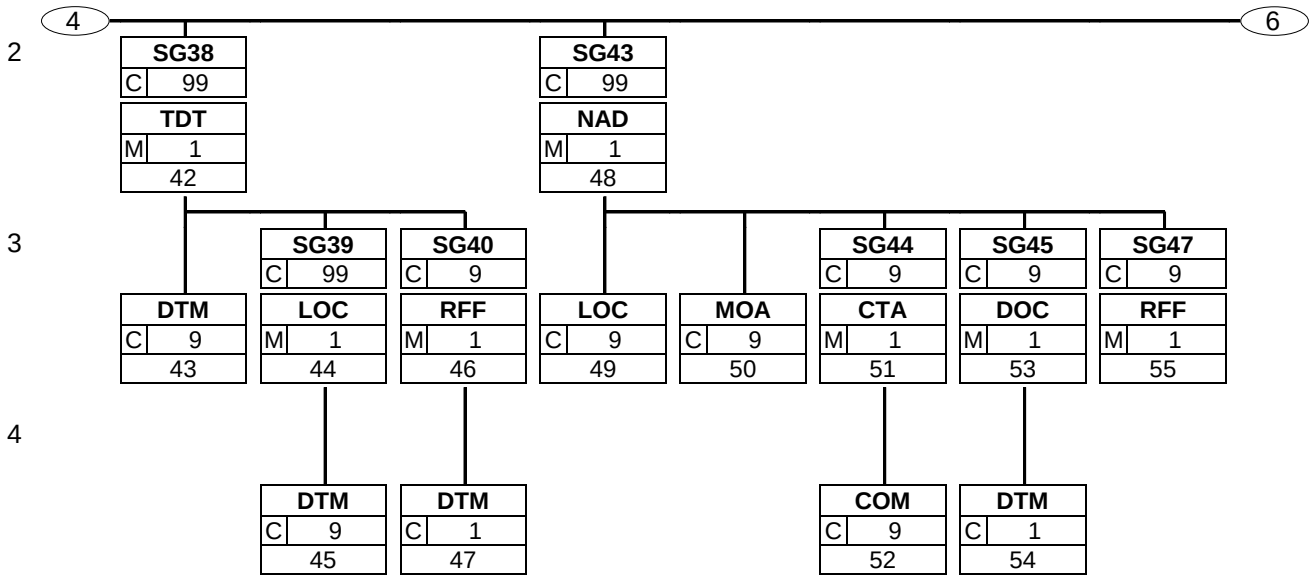

3. Branching Diagram

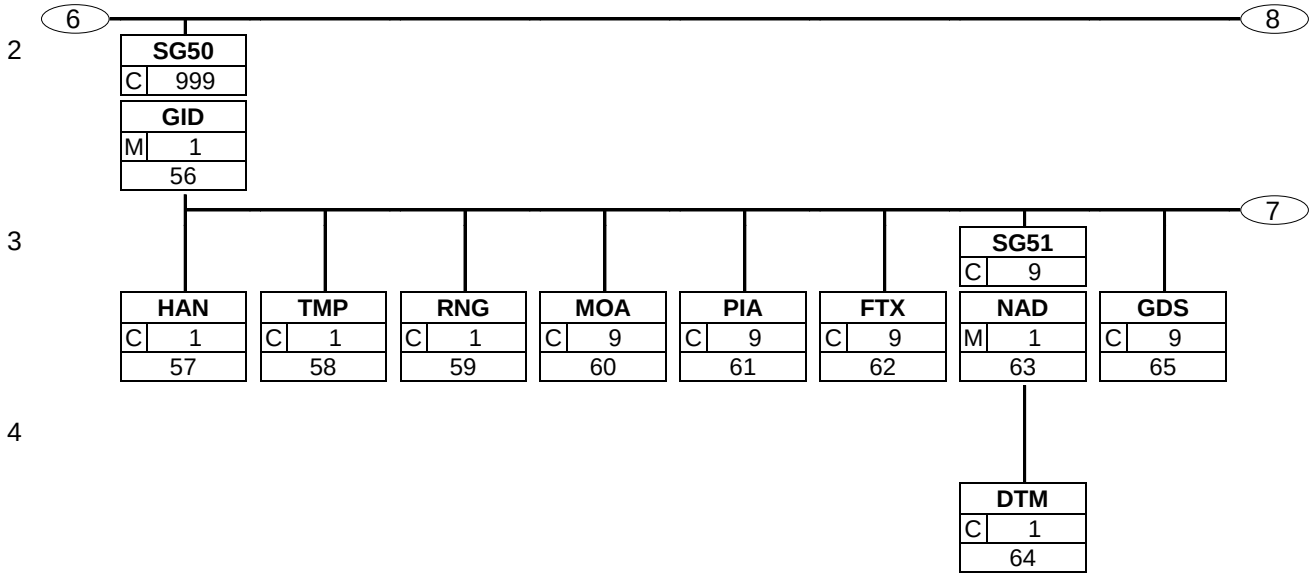

3. Branching Diagram

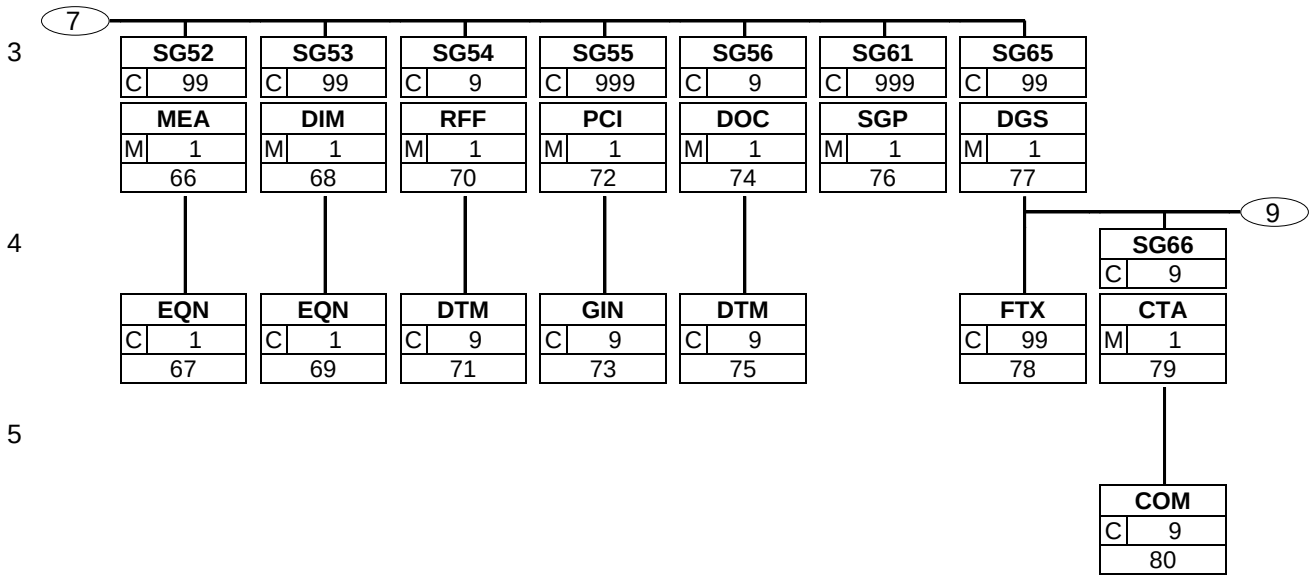

3. Branching Diagram

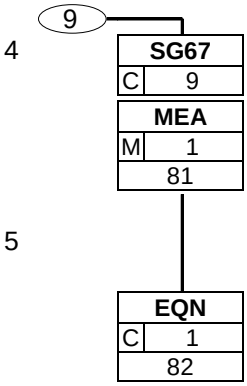

3. Branching Diagram

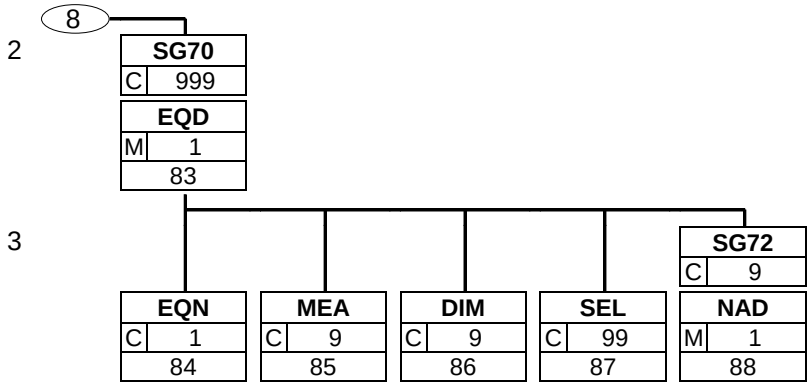

3. Branching Diagram

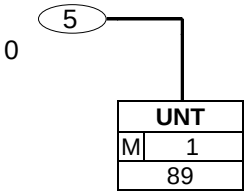

4. Segments Description

Forwarding And Consolidation Summary Heading Section

UNH - M 1 - Message header

This segment is used to head, identify and specify a message.

BGM - M 1 - Beginning of message

This segment is used to indicate the type and function of a message and to transmit the identifying number.

DTM - C 9 - Date/time/period

This segment is used to specify the dates related to the Forwarding and Consolidation Summary message.

FTX - C 99 - Free text

This segment is used to provide free form or coded text information related to the entire message.

CNT - C 9 - Control total

This segment is used to provide message control information such as the total number of consignments in the consolidation, the total gross weight of the consolidated consignments.

SG1 - C 9 - **RFF-DTM**

A group of segments containing references and constants which apply to the entire message.

RFF - M 1 - Reference

This segment is used to specify references which are related to the complete message.

DTM - C 9 - Date/time/period

This segment is used to specify the date of the reference specified in the previous RFF segment.

SG4 - C 9 - **NAD**

A group of segments to identify a party and related contacts and references.

NAD - M 1 - Name and address

This NAD segment can be used to identify parties independently of the details of transport in SG9.

SG7 - C 9 - **TCC-CUX**

A group of segments to specify charges associated with the transport of the consolidation.

TCC - M 1 - Charge/rate calculations

This segment enables the transmission of the freight rate.

CUX - C 1 - Currencies

This segment is used to specify currency information for the freight calculation.

SG9 - C 9 - **TDT-TSR-SG10-SG16**

A group of segments to describe all transport details of the voyage/flight or consolidation and of all parties involved.

TDT - M 1 - Details of transport

This segment is used to specify transport services required to transport the complete consolidated consignment. The message should be used to provide only one transport stage and therefore this segment group is only repeated once per message.

TSR - C 9 - Transport service requirements

This segment is used to indicate any special contracts, services or priorities in relation to the transport of the consolidated consignment.

4. Segments Description

SG10 - C 9 - **LOC-DTM**

A group of segments identifying the relevant locations aswell as date(s) and time(s) related to the transport stage.

LOC - M 1 - Place/location identification

This segment is used to identify locations related to the transport details for the consolidated consignment.

DTM - C 9 - Date/time/period

This segment is used to specify dates relating to the transport details for the consolidated consignment.

SG16 - C 9 - **NAD-LOC-SG17-SG18**

A group of segments to specify the parties related to the specified transport stage.

NAD - M 1 - Name and address

This segment is used to identify the parties involved in the Forwarding and Consolidation Summary message. Identification of the Consignor and Carrier or Freight Forwarder is mandatory in the Forwarding and Consolidation Summary message.

LOC - C 9 - Place/location identification

This segment is used to identify locations related to the party identified in the NAD segment.

SG17 - C 9 - **CTA-COM**

A group of segments to indicate contacts related to the party.

CTA - M 1 - Contact information

This segment is used to identify department and contact names within the party specified in the NAD segment.

COM - C 9 - Communication contact

This segment identifies the communications number and type of communications for the person or department identified in the previous CTA segment.

SG18 - C 9 - **DOC-DTM**

A group of segments to specify a document related to the party.

DOC - M 1 - Document/message details

This segment is used to identify any documentation which must accompany the consolidated consignment.

DTM - C 1 - Date/time/period

This segment is used to specify any dates related to the previous DOC segment.

SG21 - C 999 - **EQD-EQN-SEL-NAD**

A group of segments to specify equipment in which consignments are transported (e.g. trailer, railway wagon, ULD, etc.). This segment group WILL NOT be used in the deep sea context. This is because EQD in this context is used to define an extended transport such as a trailer attached to a truck, containers attached to a trailer etc. Containers in the deep sea context ARE NOT part of an extended definition of transport but are considered as integral with the consignment and are thus described at the consignment level.

EQD - M 1 - Equipment details

This segment is used to indicate the units of equipment which will be used to transport the consolidated consignment.

EQN - C 1 - Number of units

This segment is used to specify the number of pieces of equipment required for the transport of the consolidated consignment.

4. Segments Description

SEL	- C	9	- Seal number This segment is used to specify a seal number and to identify the sealing party for the equipment identified in the EQD segment.
NAD	- C	9	- Name and address This segment is used to identify any parties related to the equipment specified in the EQD segment.
SG25	- C	9999	- **CNI-DTM-CNT-TSR-MOA-FTX-SG31-SG32-SG33-SG38-SG43-SG50-SG70** A segment group to give information about all consignments included in a voyage/ flight or consolidation.
CNI	- M	1	- Consignment information This segment is used to identify a consignment included in the consolidation by its shipment reference number. In the IFTMnn messages the shipment reference number is provided in data element 1153 of the RFF segment at the message level using the code value 'CU'.
DTM	- C	9	- Date/time/period This segment is used to specify any dates related to the consignment identified in the CNI segment.
CNT	- C	9	- Control total This segment is used to provide consignment control information such as, the total number of packages in the consignment.
TSR	- C	9	- Transport service requirements This segment is used to indicate any special contracts, services or priorities related to the current consignment.
MOA	- C	99	- Monetary amount This segment is used to specify monetary values related to the current consignment.
FTX	- C	99	- Free text This segment is used to provide free form or coded text information related to consignment.
SG31	- C	2	- **TOD-LOC** A group of segments to specify terms of delivery and related locations.
TOD	- M	1	- Terms of delivery or transport This segment is used to specify the terms of delivery for the current consignment.
LOC	- C	9	- Place/location identification This segment is used to indicate the location to which the terms of delivery apply.
SG32	- C	999	- **RFF-DTM** A group of segments containing a reference and constants which apply to the entire consignment.
RFF	- M	1	- Reference This segment is used to specify any references related to the current consignment.
DTM	- C	9	- Date/time/period This segment is used to specify any dates related to the previous RFF segment.
SG33	- C	9	- **GOR-DTM-LOC-SEL-FTX-SG34** A group of segments to identify customs and other governmental procedures and required documents.
GOR	- M	1	- Governmental requirements This segment is used to indicate any applicable governmental procedures and required action related to the import, export or transit of the current consignment, e.g. arrangements to be made for the inspection of the goods by customs at the time of export.

4. Segments Description

DTM - C 9 - Date/time/period

This segment is used to specify any dates or periods related to governmental procedures and/or documents for the current consignment, e.g. the expiration date of the related customs documents.

LOC - C 9 - Place/location identification

This segment is used to identify any locations related to the governmental procedures for the current consignment, e.g. the customs office at which the consignment leaves the country.

SEL - C 9 - Seal number

This segment is used to specify a seal number and the sealing party for the current consignment, e.g. the carrier being responsible for sealing the truck(s).

FTX - C 9 - Free text

This segment is used to specify additional information for the current consignment.

SG34 - C 9 - **DOC-DTM**

A group of segments to specify required documents by government.

DOC - M 1 - Document/message details

This segment is used to identify any documentation related to the current consignment which is required by government, e.g. despatch note model T2 that ascertains that all goods of the consignment were originally produced in a country of the European Community.

DTM - C 1 - Date/time/period

This segment is used to specify any dates related to the previous DOC segment, e. g. date of the despatch note model T2.

SG38 - C 99 - **TDT-DTM-SG39-SG40**

A group of segments to indicate details of the movement of goods such as mode and means of transport, locations, departure, and arrival date(s) and time(s).

TDT - M 1 - Details of transport

This segment is used to indicate the transport means, and where necessary, the carrier to be used for the current consignment. When used, it is mandatory to indicate the main carriage transport mode in this segment.

DTM - C 9 - Date/time/period

This segment is used to specify dates relating to the transport means.

SG39 - C 99 - **LOC-DTM**

A group of segments to specify a location and date/time related to this leg of transport.

LOC - M 1 - Place/location identification

This segment is used to identify locations relating to the transport details for the current consignment.

DTM - C 9 - Date/time/period

This segment is used to specify any dates related to the location identified for a specific stage of transport.

SG40 - C 9 - **RFF-DTM**

A group of segments to specify an additional reference related to the stage of the transport.

RFF - M 1 - Reference

This segment is used to specify references related to the transport details for the current consignment.

DTM - C 1 - Date/time/period

This segment is used to specify any dates related to the previous RFF segment.

4. Segments Description

SG43 - C 99 - **NAD-LOC-MOA-SG44-SG45-SG47**

A group of segments to identify a party, related references, locations contacts, required documents, and charges to be paid by the party.

NAD - M 1 - Name and address

This segment is used to identify the consignee for the currently identified consignment.

LOC - C 9 - Place/location identification

This segment is used to identify any locations related to the party identified in the NAD segment.

MOA - C 9 - Monetary amount

This segment is used to indicate monetary amounts for the party receiving the goods.

SG44 - C 9 - **CTA-COM**

A group of segments identifying a contact and its communications related to the party.

CTA - M 1 - Contact information

This segment is used to provide department and contact names within the party identified in the NAD segment.

COM - C 9 - Communication contact

This segment identifies the communications number and type of communications for the person or department identified in the previous CTA segment.

SG45 - C 9 - **DOC-DTM**

A group of segments to identify required documents.

DOC - M 1 - Document/message details

This segment is used to identify any documentation which is required by the party identified in the NAD segment.

DTM - C 1 - Date/time/period

This segment is used to specify any dates related to the previous DOC segment.

SG47 - C 9 - **RFF**

A group of segments to specify a reference related to the party.

RFF - M 1 - Reference

This segment is used to identify any references related to the party identified in the NAD segment which are required but do not accompany the consignment, e.g., contract numbers.

Forwarding and Consolidation Detail Section

SG50 - C 999 - **GID-HAN-TMP-RNG-MOA-PIA-FTX-SG51-GDS-SG52-SG53-SG54-SG55-SG56-SG61-SG65**

A group of segments to describe the goods items for which transport is undertaken.

GID - M 1 - Goods item details

This segment is used to specify the number and type of packages which make up a goods item in the current consignment.

HAN - C 1 - Handling instructions

This segment is used to provide a handling instruction relevant to the transport line item identified in the GID segment.

TMP - C 1 - Temperature

This segment is used to specify a temperature setting related to the current goods item.

4. Segments Description

RNG - C 1 - Range details

This segment is used to specify a temperature range for the current goods item.

MOA - C 9 - Monetary amount

This segment is used to specify the value of the current goods item for customs, insurance or other valuation purposes.

PIA - C 9 - Additional product id

This segment is used to specify additional product identification codes for the current goods item.

FTX - C 9 - Free text

This segment is used to provide free form or coded text information related to the goods item.

SG51 - C 9 - **NAD-DTM**

A group of segments to identify different places of collection and/or delivery for the goods item.

NAD - M 1 - Name and address

This segment is used to specify the delivery and despatch parties for the current goods item.

DTM - C 1 - Date/time/period

This segment is used to specify dates and times related to the despatch or delivery parties specified in the previous NAD segment.

GDS - C 9 - Nature of cargo

This segment is used to specify the exact nature of the goods.

SG52 - C 99 - **MEA-EQN**

A group of segments to specify measurements applicable to a goods item.

MEA - M 1 - Measurements

This segment is used to specify a measurement for the goods identified in the GID segment. All measurements given in the MEA segments relate to the highest level of packaging (the despatch units) identified in the GID segment.

EQN - C 1 - Number of units

This segment is used to specify the number of packages (despatch units) within the goods item to which the measurement applies.

SG53 - C 99 - **DIM-EQN**

A group of segments to specify dimensions applicable to a goods item.

DIM - M 1 - Dimensions

This segment is used to indicate the dimensions of the goods item identified in the GID segment. All dimensions given in the DIM segments relate to the highest level packaging (the despatch units) identified in the GID segment.

EQN - C 1 - Number of units

This segment is used to specify the number of packages (despatch units) within the goods items to which the dimensions apply.

SG54 - C 9 - **RFF-DTM**

A group of segments to identify references to a goods item.

RFF - M 1 - Reference

This segment is used to specify references which are applicable to the current goods item only. The references specified will override those provided in group 32 when the same qualifier is used.

DTM - C 9 - Date/time/period

This segment is used to indicate dates relevant to the references specified in the previous RFF segment.

4. Segments Description

SG55 - C 999 - **PCI-GIN**

A group of segments to specify marks and numbers of a goods item.

PCI - M 1 - Package identification

This segment is used to specify what markings and labels are marked on the packaging of the current goods item.

GIN - C 9 - Goods identity number

This segment is used to provide the Serial Shipping Container Code which has been marked on the packaging of the current goods item.

SG56 - C 9 - **DOC-DTM**

A group of segments to specify documents and associated date(s) and time(s) for a goods item.

DOC - M 1 - Document/message details

This segment is used to specify documents which are required for the current goods item only and which must accompany the goods during transport.

DTM - C 9 - Date/time/period

This segment is used to specify dates relating to the documents identified in the previous DOC segment.

SG61 - C 999 - **SGP**

A group of segments to specify the distribution of a goods item among the transport equipment.

SGP - M 1 - Split goods placement

This segment is used to specify the placement of the goods item within the equipment used for its transportation.

SG65 - C 99 - **DGS-FTX-SG66-SG67**

A group of segments to specify dangerous goods details related to the goods item. One goods item may be in different dangerous goods classes.

DGS - M 1 - Dangerous goods

This segment is used to indicate whether the current goods item is considered a dangerous good.

FTX - C 99 - Free text

This segment is used to specify any additional information required for the dangerous goods.

SG66 - C 9 - **CTA-COM**

A group of segments to identify a contact to whom communication regarding the dangerous goods can be directed.

CTA - M 1 - Contact information

This segment is used to specify a contact name relating to the dangerous goods identified in the DGS segment.

COM - C 9 - Communication contact

This segment identifies the communications number and type of communications for the person or department identified in the previous CTA segment.

SG67 - C 9 - **MEA-EQN**

A group of segments to identify dangerous goods measurements.

MEA - M 1 - Measurements

This segment is used to indicate a measurement of the current dangerous goods item.

EQN - C 1 - Number of units

This segment is used to indicate the number of units to which the dangerous goods measurements apply.

4. Segments Description

SG70 - C 999 - **EQD-EQN-MEA-DIM-SEL-SG72**

A group of segments to specify equipment in which goods are transported.

EQD - M 1 - Equipment details

This segment is used to indicate the units of equipment which will be used to transport the current consignment.

EQN - C 1 - Number of units

This segment is used to specify the number of pieces of equipment required.

MEA - C 9 - Measurements

This segment is used to specify the physical dimensions of the equipment identified in the preceding EQD segment.

DIM - C 9 - Dimensions

This segment is used to indicate the dimensions of the equipment identified in the EQD segment.

SEL - C 99 - Seal number

This segment is used to specify a seal number, and the party applying the seal, for the equipment identified in the EQD segment.

SG72 - C 9 - **NAD**

A group of segments to identify different equipment pick-up or drop-off places.

NAD - M 1 - Name and address

This segment is used to specify pick up or drop off parties for the equipment specified in the EQD segment.

Forwarding And Consolidation Summary Section

UNT - M 1 - Message trailer

This segment is a mandatory UN/EDIFACT segment. It must always be the last segment in the message.

5. Segments Layout

This section describes each segment used in the EANCOM® Forwarding and consolidation summary message. The original EDIFACT segment layout is listed. The appropriate comments relevant to the EANCOM® subset are indicated.

Notes:

1. The segments are presented in the sequence in which they appear in the message. The segment or segment group tag is followed by the (M)andatory / (C)onditional indicator, the maximum number of occurrences and the segment description.

2. Reading from left to right, in column one, the data element tags and descriptions are shown, followed by in the second column the EDIFACT status (M or C), the field format, and the picture of the data elements. These first pieces of information constitute the original EDIFACT segment layout.

   Following the EDIFACT information, EANCOM® specific information is provided in the third, fourth, and fifth columns. In the third column a status indicator for the use of (C)onditional EDIFACT data elements (see 2.1 through 2.3 below), in the fourth column the restricted indicator (see point 3 on the following page), and in the fifth column notes and code values used for specific data elements in the message.

2.1 (M)andatory data elements in EDIFACT segments retain their status in EANCOM®.

2.2 Additionally, there are five types of status for data elements with a (C)onditional EDIFACT status, whether for simple, component or composite data elements. These are listed below and can be identified when relevant by the following abbreviations:

- REQUIRED	**R**	Indicates that the entity is required and must be sent.
- ADVISED	**A**	Indicates that the entity is advised or recommended.
- DEPENDENT	**D**	Indicates that the entity must be sent in certain conditions, as defined by the relevant explanatory note.
- OPTIONAL	**O**	Indicates that the entity is optional and may be sent at the discretion of the user.
- NOT USED	**N**	Indicates that the entity is not used and should be omitted.

2.3 If a composite is flagged as **N, NOT USED**, all data elements within that composite will have blank status indicators assigned to them.

3. Status indicators detailed in the fourth column which directly relate to the code values detailed in the fifth **column** may have two values:

- RESTRICTED	*****	A data element marked with an asterisk (*) in the fourth column indicates that the listed codes in column five are the only codes available for use with this data element, in this segment, in this message.
- OPEN		All data elements where coded representation of data is possible and a restricted set of code values is not indicated are open (no asterisk in fourth column). The available codes are listed in the EANCOM® Data Elements and Code Sets Directory. Code values may be given as examples or there may be a note on the format or type of code to be used.

4. Different colours are used for the code values in the segment details: restricted codes are in red and open codes in blue.

5. Segments Layout

Segment number: 1

UNH - M 1 - Message header

Function:

To head, identify and specify a message.

		EDIFACT	GS1	*	Description
0062	Message reference number	M an..14	**M**		Senders unique message reference. Sequence number of the messages in the interchange. DE 0062 in the UNT will be identical. Sender generated.
S009	MESSAGE IDENTIFIER	M	**M**		
0065	Message type	M an..6	**M**	*	IFCSUM = Forwarding and consolidation summary message
0052	Message version number	M an..3	**M**	*	D = Draft version/UN/EDIFACT Directory
0054	Message release number	M an..3	**M**	*	01B = Release 2001 - B
0051	Controlling agency	M an..2	**M**	*	UN = UN/CEFACT
0057	Association assigned code	C an..6	**R**	*	EAN004 = GS1 version control number (GS1 Permanent Code) Indicates that the message is the EANCOM version 004 of the UNSM Forwarding and Consolidation Summary.
0068	Common access reference	C an..35	**N**		
S010	STATUS OF THE TRANSFER	C	**N**		
0070	Sequence of transfers	M n..2			
0073	First and last transfer	C a1			

Segment Notes:

This segment is used to head, identify and specify a message.
DE's 0065, 0052, 0054, and 0051: Indicate that the message is a UNSM Forwarding and Consolidation Summary message based on the D.01B directory under the control of the United Nations.

Example:
UNH+ME000001+IFCSUM:D:01B:UN:EAN004'

5. Segments Layout

Segment number: 2

BGM - M 1 - Beginning of message					
Function: To indicate the type and function of a message and to transmit the identifying number.					
		EDIFACT	GS1	*	Description
C002	DOCUMENT/MESSAGE NAME	C	**R**		
1001	Document name code	C an..3	**R**	*	335 = Booking request 610 = Forwarding instructions 630 = Shipping note 770 = Booking confirmation 781 = Arrival notice (goods) Code value '335' should be used to book transport space for multiple consignments. When using this code it is not necessary to provide all of the goods items details as these will be fully specified in the subsequent multiple transport instruction (code value '610'). While the code values '335' and '610' are also used in the IFTMBF and IFTMIN messages respectively the uniqueness of their application in these messages and the IFCSUM message is guaranteed by the combination of the data element 1001 code value and the data element 0065 code value in the UNH segment.
1131	Code list identification code	C an..17	**N**		
3055	Code list responsible agency code	C an..3	**N**		
1000	Document name	C an..35	**O**		
C106	DOCUMENT/MESSAGE IDENTIFICATION	C	**R**		
1004	Document identifier	C an..35	**R**		Forwarding and consolidation summary number assigned by the document sender. For global unique identification of documents Global Document Type Identifier (GDTI) is available.
1056	Version identifier	C an..9	**N**		
1060	Revision identifier	C an..6	**N**		

5. Segments Layout

1225	Message function code	C an..3	**R**	*	1 = Cancellation 5 = Replace 7 = Duplicate 9 = Original 31 = Copy 42 = Confirmation via specific means 46 = Provisional The message function, coded is a critical data element in this segment. It applies to all data indicated in the message. The following definitions apply for the restricted codes: 1 = Cancellation = A cancellation of an entire previously sent forwarding and consolidation summary message. The message being cancelled is identified in the RFF segment in group 01. 5 = Replace - Cancel the original forwarding and consolidation summary message and replace with this message The original message which is being

5. Segments Layout

Segment number: 2

	EDIFACT	GS1	*	Description
				replaced is identified in the RFF segment group 01. 7 = Duplicate - Re-transmission on the request of the receiver. 9 = Original - Original transmission of the forwarding and consolidation summary message. 31 = Copy - Copy of the forwarding and consolidation summary message for a third party for information purposes. 42 = Confirmation via specific means - A confirmation of a previous message sent by means other than EDI, e.g. FAX. 46 = Provisional - This code is used to indicate that the content of the Multiple Consingemnt Transport Instruction message is provisional and is subject to final approval.
4343 Response type code	C an..3	**N**		

Segment Notes:

This segment is used to indicate the type and function of a message and to transmit the identifying number.
All references other than the document number DE 1004 are to be put in the RFF segment.

Example:
BGM+610+569952+9'

5. Segments Layout

Segment number: 3

DTM	- C	9 - Date/time/period			
Function: To specify date, and/or time, or period.					
		EDIFACT	GS1	*	Description
C507	DATE/TIME/PERIOD	M	**M**		
2005	Date or time or period function code qualifier	M an..3	**M**	*	10 = Shipment date/time, requested 11 = Despatch date and/or time 17 = Delivery date/time, estimated 63 = Delivery date/time, latest 64 = Delivery date/time, earliest 137 = Document/message date/time 235 = Collection date/time, latest
2380	Date or time or period value	C an..35	**R**		
2379	Date or time or period format code	C an..3	**R**		102 = CCYYMMDD

Segment Notes:

This segment is used to specify the dates related to the Forwarding and Consolidation Summary message.
DE 2005: Identification of the 'Document/message date/time' (code value 137) is mandatory in an EANCOM message.

Example:
DTM+137:20020112:102'

5. Segments Layout

Segment number: 4

FTX	- C	99 - Free text			
Function: To provide free form or coded text information.					
		EDIFACT	GS1	*	Description
4451	Text subject code qualifier	M an..3	**M**		AAI = General information BLR = Transport document remarks
4453	Free text function code	C an..3	**O**	*	1 = Text for subsequent use
C107	TEXT REFERENCE	C	**D**		This composite is only used when trading partners have agreed to use mutually defined code values.
4441	Free text value code	M an..17	**M**		
1131	Code list identification code	C an..17	**O**		
3055	Code list responsible agency code	C an..3	**D**		91 = Assigned by supplier or supplier's agent 92 = Assigned by buyer or buyer's agent
C108	TEXT LITERAL	C	**D**		This composite is only used if coded text can not be used.
4440	Free text value	M an..512	**M**		
4440	Free text value	C an..512	**O**		
4440	Free text value	C an..512	**O**		
4440	Free text value	C an..512	**O**		
4440	Free text value	C an..512	**O**		
3453	Language name code	C an..3	**D**		ISO 639 two alpha code This data element is only used when non coded free text has been provided in data element C108.
4447	Free text format code	C an..3	**N**		

Segment Notes:

This segment is used to provide free form or coded text information related to the entire message.
Use of this segment in free form is not recommended since it may inhibit automatic processing of the Forwarding and Consolidated Summary. Coded references to standard texts is an available functionality which enables automatic processing and reduces transmission overheads. Standard texts should be mutually defined between trading partners and can be used to cover legal or other requirements.

Example:
FTX+AAI+1+002::91'
(Code "002" is agreed to express = Please ensure complete delivery on requested date.)

5. Segments Layout

Segment number: 5

CNT - C 9 - Control total

Function:

To provide control total.

		EDIFACT	GS1	*	Description
C270	CONTROL	M	**M**		
6069	Control total type code qualifier	M an..3	**M**		7 = Total gross weight 10 = Total number of consignments 11 = Total number of packages 15 = Total consignment, cube 16 = Total number of equipment When using value '15' in this data element the total specified in data element 6066 is arrived at by adding the values specified in data element 6314 of the MEA segment at goods item level when the GMC (Gross measurement cube) code is used in data element 6313 in the same MEA segment. When using code value '11' the total specified in data element 6066 is arrived at by adding the values specified only in the first occurence of C213, data element 7224, of the GID segment.
6066	Control total value	M n..18	**M**		
6411	Measurement unit code	C an..3	**O**		

Segment Notes:

This segment is used to provide message control information such as the total number of consignments in the consolidation, the total gross weight of the consolidated consignments.

Example:
CNT+11:566'

5. Segments Layout

Segment number: 6

SG1	- C	9 -	RFF-DTM
RFF	- M	1 -	Reference

Function:

To specify a reference.

		EDIFACT	GS1	*	Description
C506	REFERENCE	M	**M**		
1153	Reference code qualifier	M an..3	**M**	*	ACD = Additional reference number ADE = Account number AUB = Party reference CT = Contract number CU = Consignor's reference number PFB = Firm booking reference number (GS1 Temporary Code) PK = Packing list number SRN = Shipment reference number TIN = Transport instruction number Code values 'PFB' and 'TRI' should only be used in conjunction with the codes 1 or 5 in data element 1225 in the BGM segment. Code value 'ADE' should only be used in conjunction with the code 'CZ' in data element 3035 in the NAD segment of segment group 9. Code value 'CU' is used to provide references generated by the consignor which are relevant for the complete consolidation.
1154	Reference identifier	C an..70	**R**		
1156	Document line identifier	C an..6	**N**		
4000	Reference version identifier	C an..35	**N**		
1060	Revision identifier	C an..6	**N**		

Segment Notes:

This segment is used to specify references which are related to the complete message.

Example:
RFF+TRI:6214'

5. Segments Layout

Segment number: 7

SG1	- C	9 -	RFF-DTM
DTM	- C	9 -	Date/time/period

Function:

To specify date, and/or time, or period.

		EDIFACT	GS1	*	Description
C507	DATE/TIME/PERIOD	M	**M**		
2005	Date or time or period function code qualifier	M an..3	**M**	*	171 = Reference date/time
2380	Date or time or period value	C an..35	**R**		
2379	Date or time or period format code	C an..3	**R**		102 = CCYYMMDD

Segment Notes:

This segment is used to specify the date of the reference specified in the previous RFF segment.

Example:
DTM+171:20020105:102'

5. Segments Layout

Segment number: 8

SG4	- C	9 -	NAD
NAD	- M	1 -	Name and address

Function:

To specify the name/address and their related function, either by C082 only and/or unstructured by C058 or structured by C080 thru 3207.

		EDIFACT	GS1	*	Description
3035	Party function code qualifier	M an..3	**M**	*	BY = Buyer CA = Carrier DP = Delivery party LSP = Logistic Service Provider (GS1 Temporary Code) OB = Ordered by SU = Supplier WH = Warehouse keeper
C082	PARTY IDENTIFICATION DETAILS	C	**A**		
3039	Party identifier	M an..35	**M**		For identification of parties it is recommended to use GLN - Format n13.
1131	Code list identification code	C an..17	**N**		
3055	Code list responsible agency code	C an..3	**R**	*	9 = GS1
C058	NAME AND ADDRESS	C	**O**		This composite may only be used to fulfill the requirements of directive 2003/58/EC, article 4.
3124	Name and address description	M an..35	**M**		
3124	Name and address description	C an..35	**O**		
3124	Name and address description	C an..35	**O**		
3124	Name and address description	C an..35	**O**		
3124	Name and address description	C an..35	**O**		
C080	PARTY NAME	C	**D**		
3036	Party name	M an..35	**M**		Party Name in clear text.
3036	Party name	C an..35	**O**		
3036	Party name	C an..35	**O**		
3036	Party name	C an..35	**O**		
3036	Party name	C an..35	**O**		
3045	Party name format code	C an..3	**O**		
C059	STREET	C	**D**		
3042	Street and number or post office box identifier	M an..35	**M**		Building Name/Number and Street Name
3042	Street and number or post office box identifier	C an..35	**O**		
3042	Street and number or post office box identifier	C an..35	**O**		
3042	Street and number or post office box identifier	C an..35	**O**		
3164	City name	C an..35	**D**		City/Town name, clear text
C819	COUNTRY SUB-ENTITY	C	**D**		

5. Segments Layout

Segment number: 8

		EDIFACT	GS1	*	Description
	DETAILS				
3229	Country sub-entity name code	C an..9	**O**		
1131	Code list identification code	C an..17	**O**		
3055	Code list responsible agency code	C an..3	**O**		
3228	Country sub-entity name	C an..70	**O**		County/State, clear text.
3251	Postal identification code	C an..17	**D**		Postal Code
3207	Country name code	C an..3	**D**		ISO 3166 two alpha code

Segment Notes:

This NAD segment can be used to identify parties independently of the details of transport in SG9.
Dependency Notes:
The following composites and data elements are only used when a coded name and address can not be used.
The affected composites and data elements are as follows:
C080 - C059 - 3164 - C819 - 3251 - 3207

Example:
NAD+LSP+5411234512309::9'

5. Segments Layout

Segment number: 9

SG7	- C	9 -	TCC-CUX
TCC	- M	1 -	Charge/rate calculations

Function:

To specify charges.

		EDIFACT	GS1	*	Description
C200	CHARGE	C	**R**		
8023	Freight and other charges description identifier	C an..17	**R**		Freight and other charges description identifier UN/ ECE Recommendation 23 code list, e.g. 101021
1131	Code list identification code	C an..17	**O**		
3055	Code list responsible agency code	C an..3	**D**		6 = UN/ECE (United Nations - Economic Commission for Europe) 9 = GS1
8022	Freight and other charges description	C an..26	**O**		
4237	Payment arrangement code	C an..3	**O**		
7140	Item identifier	C an..35	**O**		
C203	RATE/TARIFF CLASS	C	**O**		
5243	Rate or tariff class description code	M an..9	**M**		
1131	Code list identification code	C an..17	**O**		
3055	Code list responsible agency code	C an..3	**O**		
5242	Rate or tariff class description	C an..35	**O**		
5275	Supplementary rate or tariff code	C an..6	**O**		
1131	Code list identification code	C an..17	**O**		
3055	Code list responsible agency code	C an..3	**O**		
5275	Supplementary rate or tariff code	C an..6	**O**		
1131	Code list identification code	C an..17	**O**		
3055	Code list responsible agency code	C an..3	**O**		
C528	COMMODITY/RATE DETAIL	C	**N**		
7357	Commodity identification code	C an..18			
1131	Code list identification code	C an..17			
3055	Code list responsible agency code	C an..3			
C554	RATE/TARIFF CLASS DETAIL	C	**N**		
5243	Rate or tariff class description code	C an..9			
1131	Code list identification code	C an..17			
3055	Code list responsible agency code	C an..3			

5. Segments Layout

Segment number: 9

Segment Notes:

This segment enables the transmission of the freight rate.

Example:
TCC+101021::6+FR::X6’

5. Segments Layout

Segment number: 10

SG7	- C	9 -	TCC-CUX
CUX	- C	1 -	Currencies

Function:

To specify currencies used in the transaction and relevant details for the rate of exchange.

		EDIFACT	GS1	*	Description
C504	CURRENCY DETAILS	C	**R**		
6347	Currency usage code qualifier	M an..3	**M**	*	2 = Reference currency
6345	Currency identification code	C an..3	**R**		ISO 4217 three alpha
6343	Currency type code qualifier	C an..3	**C**	*	4 = Invoicing currency 10 = Pricing currency
6348	Currency rate value	C n..4	**N**		
C504	CURRENCY DETAILS	C	**D**		The second occurrence of C504 is only used if a target currency is being specified.
6347	Currency usage code qualifier	M an..3	**M**	*	3 = Target currency
6345	Currency identification code	C an..3	**R**		ISO 4217 three alpha
6343	Currency type code qualifier	C an..3	**C**	*	4 = Invoicing currency 10 = Pricing currency
6348	Currency rate value	C n..4	**O**		
5402	Currency exchange rate	C n..12	**D**		The rate of exchange which applies to the currencies. The rate of exchange is only used if a target currency has been identified in the second occurrence of C504.
6341	Exchange rate currency market identifier	C an..3	**N**		

Segment Notes:

This segment is used to specify currency information for the freight calculation.
The CUX Segment is mandatory for international exchanges.
When specifying Reference and Target Currencies for international trade, one occurrence of CUX is all that is required. The reference currency is identified in the first occurrence of composite C504, with the target currency specified in the second occurrence of C504. The rate of exchange between the two is detailed in DE 5402.
The general rule for calculating the rate of exchange is as follows : Reference Currency multiplied by Rate = Target Currency.

Example:
CUX+2:EUR:10+3:USD:4+0.90243'

5. Segments Layout

Segment number: 11

SG9	- C	9 -	TDT-TSR-SG10-SG16
TDT	- M	1 -	Details of transport

Function:

To specify the transport details such as mode of transport, means of transport, its conveyance reference number and the identification of the means of transport.

		EDIFACT	GS1	*	Description
8051	Transport stage code qualifier	M an..3	**M**	*	20 = Main-carriage transport
8028	Means of transport journey identifier	C an..17	**O**		Reference number covering the transport.
C220	MODE OF TRANSPORT	C	**A**		
8067	Transport mode name code	C an..3	**R**		10 = 20 = 30 = 40 = 60 =
8066	Transport mode name	C an..17	**N**		
C228	TRANSPORT MEANS	C	**O**		DE 8179 and DE 8178 are only used when the type of transport must be specifically identified, that is, a generic description such as road transport is unsuitable.
8179	Transport means description code	C an..8	**D**		23 = Rail bulk car 31 = Truck
8178	Transport means description	C an..17	**D**		
C040	CARRIER	C	**O**		
3127	Carrier identifier	C an..17	**A**		Global Location Number GLN - Format n13
1131	Code list identification code	C an..17	**O**		
3055	Code list responsible agency code	C an..3	**D**		9 = GS1
3128	Carrier name	C an..35	**O**		
8101	Transit direction indicator code	C an..3	**N**		
C401	EXCESS TRANSPORTATION INFORMATION	C	**N**		
8457	Excess transportation reason code	M an..3			
8459	Excess transportation responsibility code	M an..3			
7130	Customer shipment authorisation identifier	C an..17			
C222	TRANSPORT IDENTIFICATION	C	**O**		
8213	Transport means identification name identifier	C an..9	**O**		
1131	Code list identification code	C an..17	**O**		
3055	Code list responsible agency code	C an..3	**D**		DE 3055 must be used if DE 8213 is used.
8212	Transport means identification name	C an..35	**R**		Vehicle license plate/Aircraft number.

5. Segments Layout

Segment number: 11

		EDIFACT	GS1	*	Description
8453	Transport means nationality code	C an..3	**O**		ISO 3166 two alpha code
8281	Transport means ownership indicator code	C an..3	**N**		

Segment Notes:

This segment is used to specify transport services required to transport the complete consolidated consignment. The message should be used to provide only one transport stage and therefore this segment group is only repeated once per message.

Example:
TDT+20++30+31'

5. Segments Layout

Segment number: 12

SG9	- C	9 -	TDT-TSR-SG10-SG16
TSR	- C	9 -	Transport service requirements

Function:

To specify the contract and carriage conditions and service and priority requirements for the transport.

		EDIFACT	GS1	*	Description
C536	CONTRACT AND CARRIAGE CONDITION	C	**O**		
4065	Contract and carriage condition code	M an..3	**M**		2 = Special agreement for parcels transport 3 = Special agreement for full loading transport 5 = FIATA combined transport bill of lading 11 = CMR carnet
1131	Code list identification code	C an..17	**O**		
3055	Code list responsible agency code	C an..3	**D**		
C233	SERVICE	C	**O**		
7273	Service requirement code	M an..3	**M**		1 = Carrier loads 4 = Shipper loads
1131	Code list identification code	C an..17	**O**		
3055	Code list responsible agency code	C an..3	**D**		
7273	Service requirement code	C an..3	**O**		
1131	Code list identification code	C an..17	**O**		
3055	Code list responsible agency code	C an..3	**D**		
C537	TRANSPORT PRIORITY	C	**O**		
4219	Transport service priority code	M an..3	**M**		1 = Express 2 = High speed 3 = Normal speed
1131	Code list identification code	C an..17	**O**		
3055	Code list responsible agency code	C an..3	**D**		
C703	NATURE OF CARGO	C	**N**		
7085	Cargo type classification code	M an..3			
1131	Code list identification code	C an..17			
3055	Code list responsible agency code	C an..3			

Segment Notes:

This segment is used to indicate any special contracts, services or priorities in relation to the transport of the consolidated consignment.

Example:
TSR+3+1'

5. Segments Layout

Segment number: 13

SG9	- C	9 -	TDT-TSR-SG10-SG16
SG10	- C	9 -	LOC-DTM
LOC	- M	1 -	Place/location identification

Function:

To identify a place or a location and/or related locations.

		EDIFACT	GS1	*	Description
3227	Location function code qualifier	M an..3	**M**		9 = Place/port of loading 11 = Place/port of discharge 13 = Place of transhipment 17 = Border crossing place
C517	LOCATION IDENTIFICATION	C	**A**		
3225	Location name code	C an..25	**A**		GLN - Format n13
1131	Code list identification code	C an..17	**O**		
3055	Code list responsible agency code	C an..3	**D**		9 = GS1 DE 3055 must be used if DE 3225 is used and does not contain an UN/LOCODE.
3224	Location name	C an..256	**O**		
C519	RELATED LOCATION ONE IDENTIFICATION	C	**N**		
3223	First related location name code	C an..25			
1131	Code list identification code	C an..17			
3055	Code list responsible agency code	C an..3			
3222	First related location name	C an..70			
C553	RELATED LOCATION TWO IDENTIFICATION	C	**N**		
3233	Second related location name code	C an..25			
1131	Code list identification code	C an..17			
3055	Code list responsible agency code	C an..3			
3232	Second related location name	C an..70			
5479	Relation code	C an..3	**N**		

Segment Notes:

This segment is used to identify locations related to the transport details for the consolidated consignment.

Example:
LOC+9+5412345678908::9'

5. Segments Layout

Segment number: 14

SG9	- C	9 -	TDT-TSR-SG10-SG16
SG10	- C	9 -	LOC-DTM
DTM	- C	9 -	Date/time/period

Function:

To specify date, and/or time, or period.

		EDIFACT	GS1	*	Description
C507	DATE/TIME/PERIOD	M	**M**		
2005	Date or time or period function code qualifier	M an..3	**M**	*	63 = Delivery date/time, latest 64 = Delivery date/time, earliest 132 = Arrival date/time, estimated 232 = Arrival date/time, scheduled 186 = Departure date/time, actual 189 = Departure date/time, scheduled 231 = Arrival date/time, earliest 255 = Availability due date 362 = End availability date
2380	Date or time or period value	C an..35	**R**		
2379	Date or time or period format code	C an..3	**R**		102 = CCYYMMDD 203 = CCYYMMDDHHMM

Segment Notes:

This segment is used to specify dates relating to the transport details for the consolidated consignment.

Example:
DTM+189:200201151000:203'

5. Segments Layout

Segment number: 15

SG9	- C	9 -	TDT-TSR-SG10-SG16
SG16	- C	9 -	NAD-LOC-SG17-SG18
NAD	- M	1 -	Name and address

Function:

To specify the name/address and their related function, either by C082 only and/or unstructured by C058 or structured by C080 thru 3207.

		EDIFACT	GS1	*	Description
3035	Party function code qualifier	M an..3	**M**	*	CA = Carrier CZ = Consignor DEQ = Shipper FW = Freight forwarder PW = Despatch party SF = Ship from
C082	PARTY IDENTIFICATION DETAILS	C	**A**		
3039	Party identifier	M an..35	**M**		For identification of parties it is recommended to use GLN - Format n13.
1131	Code list identification code	C an..17	**N**		
3055	Code list responsible agency code	C an..3	**R**	*	9 = GS1
C058	NAME AND ADDRESS	C	**O**		This composite may only be used to fulfill the requirements of directive 2003/58/EC, article 4.
3124	Name and address description	M an..35	**M**		
3124	Name and address description	C an..35	**O**		
3124	Name and address description	C an..35	**O**		
3124	Name and address description	C an..35	**O**		
3124	Name and address description	C an..35	**O**		
C080	PARTY NAME	C	**D**		
3036	Party name	M an..35	**M**		Party Name in clear text.
3036	Party name	C an..35	**O**		
3036	Party name	C an..35	**O**		
3036	Party name	C an..35	**O**		
3036	Party name	C an..35	**O**		
3045	Party name format code	C an..3	**O**		
C059	STREET	C	**D**		
3042	Street and number or post office box identifier	M an..35	**M**		Building Name/Number and Street
3042	Street and number or post office box identifier	C an..35	**O**		Name and/or P.O. Box
3042	Street and number or post office box identifier	C an..35	**O**		
3042	Street and number or post office box identifier	C an..35	**O**		
3164	City name	C an..35	**D**		City/Town, clear text.
C819	COUNTRY SUB-ENTITY DETAILS	C	**D**		

5. Segments Layout

Segment number: 15

		EDIFACT	GS1	*	Description
3229	Country sub-entity name code	C an..9	**O**		
1131	Code list identification code	C an..17	**O**		
3055	Code list responsible agency code	C an..3	**O**		
3228	Country sub-entity name	C an..70	**O**		County/State, clear text.
3251	Postal identification code	C an..17	**D**		Postal Code
3207	Country name code	C an..3	**D**		ISO 3166 two alpha code

Segment Notes:

This segment is used to identify the parties involved in the Forwarding and Consolidation Summary message. Identification of the Consignor and Carrier or Freight Forwarder is mandatory in the Forwarding and Consolidation Summary message.

Example:
NAD+CZ+5411234512309::9'
NAD+CA+5412345123458::9'

Dependency Notes:
The following composites and data elements are only used when a coded name and address can not be used.
The affected composites and data elements are as follows:
C080 - C059 - 3164 - C819 - 3251 - 3207

5. Segments Layout

Segment number: 16

SG9	- C	9 -	TDT-TSR-SG10-SG16
SG16	- C	9 -	NAD-LOC-SG17-SG18
LOC	- C	9 -	Place/location identification

Function:

To identify a place or a location and/or related locations.

		EDIFACT	GS1	*	Description
3227	Location function code qualifier	M an..3	**M**		5 = Place of departure 13 = Place of transhipment
C517	LOCATION IDENTIFICATION	C	**A**		
3225	Location name code	C an..25	**A**		GLN - Format n13
1131	Code list identification code	C an..17	**O**		
3055	Code list responsible agency code	C an..3	**D**		9 = GS1 DE 3055 must be used if DE 3225 is used and does not contain an UN/LOCODE.
3224	Location name	C an..256	**O**		
C519	RELATED LOCATION ONE IDENTIFICATION	C	**N**		
3223	First related location name code	C an..25			
1131	Code list identification code	C an..17			
3055	Code list responsible agency code	C an..3			
3222	First related location name	C an..70			
C553	RELATED LOCATION TWO IDENTIFICATION	C	**N**		
3233	Second related location name code	C an..25			
1131	Code list identification code	C an..17			
3055	Code list responsible agency code	C an..3			
3232	Second related location name	C an..70			
5479	Relation code	C an..3	**N**		

Segment Notes:

This segment is used to identify locations related to the party identified in the NAD segment.

Example:
LOC+5+5412345678908::9'

5. Segments Layout

Segment number: 17

SG9	- C	9 -	TDT-TSR-SG10-SG16
SG16	- C	9 -	NAD-LOC-SG17-SG18
SG17	- C	9 -	CTA-COM
CTA	- M	1 -	Contact information

Function:

To identify a person or a department to whom communication should be directed.

		EDIFACT	GS1	*	Description
3139	Contact function code	C an..3	**R**		IC = Information contact
C056	DEPARTMENT OR EMPLOYEE DETAILS	C	**O**		
3413	Department or employee name code	C an..17	**O**		
3412	Department or employee name	C an..35	**O**		

Segment Notes:

This segment is used to identify department and contact names within the party specified in the NAD segment.

Example:
CTA+IC+:G REID'

5. Segments Layout

Segment number: 18

SG9	- C	9 -	TDT-TSR-SG10-SG16
SG16	- C	9 -	NAD-LOC-SG17-SG18
SG17	- C	9 -	CTA-COM
COM	- C	9 -	Communication contact

Function:

To identify a communication number of a department or a person to whom communication should be directed.

		EDIFACT	GS1	*	Description
C076	COMMUNICATION CONTACT	M	**M**		
3148	Communication address identifier	M an..512	**M**		
3155	Communication address code qualifier	M an..3	**M**		EM = Electronic mail TE = Telephone WWW = WWW-Site (GS1 Temporary Code)

Segment Notes:

This segment identifies the communications number and type of communications for the person or department identified in the previous CTA segment.

Example:
COM+0033148759632:FX'

5. Segments Layout

Segment number: 19

SG9	- C	9 -	TDT-TSR-SG10-SG16
SG16	- C	9 -	NAD-LOC-SG17-SG18
SG18	- C	9 -	DOC-DTM
DOC	- M	1 -	Document/message details

Function:

To identify documents and details directly related to it.

		EDIFACT	GS1	*	Description
C002	DOCUMENT/MESSAGE NAME	M	**M**		
1001	Document name code	C an..3	**R**		811 = Export licence 911 = Import licence
1131	Code list identification code	C an..17	**O**		
3055	Code list responsible agency code	C an..3	**D**		
1000	Document name	C an..35	**N**		
C503	DOCUMENT/MESSAGE DETAILS	C	**O**		
1004	Document identifier	C an..35	**R**		
1373	Document status code	C an..3	**O**		9 = To be printed 2 = Accompanying goods 17 = Document with the goods
1366	Document source description	C an..70	**O**		
3453	Language name code	C an..3	**O**		ISO 639 two alpha
1056	Version identifier	C an..9	**N**		
1060	Revision identifier	C an..6	**N**		
3153	Communication medium type code	C an..3	**N**		
1220	Document copies required quantity	C n..2	**O**		
1218	Document originals required quantity	C n..2	**O**		

Segment Notes:

This segment is used to identify any documentation which must accompany the consolidated consignment.

Example:
DOC+811+1253D'

5. Segments Layout

Segment number: 20

SG9	- C	9 -	TDT-TSR-SG10-SG16
SG16	- C	9 -	NAD-LOC-SG17-SG18
SG18	- C	9 -	DOC-DTM
DTM	- C	1 -	Date/time/period

Function:

To specify date, and/or time, or period.

		EDIFACT	GS1	*	Description
C507	DATE/TIME/PERIOD	M	**M**		
2005	Date or time or period function code qualifier	M an..3	**M**	*	7 = Effective date/time 36 = Expiry date 137 = Document/message date/time 273 = Validity period
2380	Date or time or period value	C an..35	**R**		
2379	Date or time or period format code	C an..3	**R**		102 = CCYYMMDD 203 = CCYYMMDDHHMM 718 = CCYYMMDD-CCYYMMDD

Segment Notes:

This segment is used to specify any dates related to the previous DOC segment.

Example:
DTM+137:20020115:102'

5. Segments Layout

Segment number: 21

SG21	- C	999	- EQD-EQN-SEL-NAD
EQD	- M	1	- Equipment details

Function:

To identify a unit of equipment.

		EDIFACT	GS1	*	Description
8053	Equipment type code qualifier	M an..3	**M**		BPN = Box pallet non exchangeable CN = Container EFP = Exchangeable EUR flat pallet PA = Pallet UL = ULD (Unit load device) BPZ = Roll Pallet 1 DPB = Roll Pallet 2
C237	EQUIPMENT IDENTIFICATION	C	**R**		
8260	Equipment identifier	C an..17	**O**		The positioning of goods items within equipment in a consignment is controlled through a link with the SGP segment using the DE 8260. DE 8260 in the EQD segment should have the same value as that specified in the SGP segment (DE 8260) in the applicable goods item group to establish the link.
1131	Code list identification code	C an..17	**O**		
3055	Code list responsible agency code	C an..3	**D**		9 = GS1
3207	Country name code	C an..3	**O**		
C224	EQUIPMENT SIZE AND TYPE	C	**O**		
8155	Equipment size and type description code	C an..10	**O**		6 = Pressurized tank 21 = Container IC 20 ft.
1131	Code list identification code	C an..17	**O**		
3055	Code list responsible agency code	C an..3	**D**		
8154	Equipment size and type description	C an..35	**O**		
8077	Equipment supplier code	C an..3	**O**		1 = Shipper supplied 2 = Carrier supplied
8249	Equipment status code	C an..3	**O**		
8169	Full or empty indicator code	C an..3	**O**		4 = Empty 5 = Full

Segment Notes:

This segment is used to indicate the units of equipment which will be used to transport the consolidated consignment.

Example:
EQD+UL+45223'

5. Segments Layout

Segment number: 22

SG21	- C	999	-	EQD-EQN-SEL-NAD
EQN	- C	1	-	Number of units

Function:

To specify the number of units.

		EDIFACT	GS1	*	Description
C523	NUMBER OF UNIT DETAILS	M	**M**		
6350	Units quantity	C n..15	**R**		
6353	Unit type code qualifier	C an..3	**N**		

Segment Notes:

This segment is used to specify the number of pieces of equipment required for the transport of the consolidated consignment.

Example:
EQN+1'

5. Segments Layout

Segment number: 23

SG21	- C	999	- EQD-EQN-SEL-NAD
SEL	- C	9	- Seal number

Function:

To specify the seal number or a range of seal numbers.

		EDIFACT	GS1	*	Description
9308	Seal identifier	C an..35	**R**		
C215	SEAL ISSUER	C	**R**		
9303	Sealing party name code	C an..3	**R**		CA = Carrier CU = Customs SH = Shipper
1131	Code list identification code	C an..17	**O**		
3055	Code list responsible agency code	C an..3	**D**		
9302	Sealing party name	C an..35	**O**		
4517	Seal condition code	C an..3	**O**		
C208	IDENTITY NUMBER RANGE	C	**N**		
7402	Object identifier	M an..35			
7402	Object identifier	C an..35			

Segment Notes:

This segment is used to specify a seal number and to identify the sealing party for the equipment identified in the EQD segment.

Example:
SEL+96753+SH'

Dependency Notes:
The use of the SEL segment in the segment group 21 respectively 70 is recommended. Only if customs seals are involved in particular transport environments such as bonded goods the SEL segment in the segment group 33 should be used.

5. Segments Layout

Segment number: 24

SG21	- C	999	- EQD-EQN-SEL-NAD
NAD	- C	9	- Name and address

Function:

To specify the name/address and their related function, either by C082 only and/or unstructured by C058 or structured by C080 thru 3207.

		EDIFACT	GS1	*	Description
3035	Party function code qualifier	M an..3	**M**		CK = Empty equipment despatch party CR = Empty equipment return party CW = Equipment owner
C082	PARTY IDENTIFICATION DETAILS	C	**A**		
3039	Party identifier	M an..35	**M**		For identification of parties it is recommended to use GLN - Format n13.
1131	Code list identification code	C an..17	**N**		
3055	Code list responsible agency code	C an..3	**R**		9 = GS1
C058	NAME AND ADDRESS	C	**O**		This composite may only be used to fulfill the requirements of directive 2003/58/EC, article 4.
3124	Name and address description	M an..35	**M**		
3124	Name and address description	C an..35	**O**		
3124	Name and address description	C an..35	**O**		
3124	Name and address description	C an..35	**O**		
3124	Name and address description	C an..35	**O**		
C080	PARTY NAME	C	**D**		
3036	Party name	M an..35	**M**		Party Name in clear text.
3036	Party name	C an..35	**O**		
3036	Party name	C an..35	**O**		
3036	Party name	C an..35	**O**		
3036	Party name	C an..35	**O**		
3045	Party name format code	C an..3	**O**		
C059	STREET	C	**D**		
3042	Street and number or post office box identifier	M an..35	**M**		Building Name/Number and Street
3042	Street and number or post office box identifier	C an..35	**O**		Name and/or P.O. Box
3042	Street and number or post office box identifier	C an..35	**O**		
3042	Street and number or post office box identifier	C an..35	**O**		
3164	City name	C an..35	**D**		City/Town, clear text.
C819	COUNTRY SUB-ENTITY DETAILS	C	**D**		
3229	Country sub-entity name code	C an..9	**O**		
1131	Code list identification code	C an..17	**O**		
3055	Code list responsible agency	C an..3	**O**		

5. Segments Layout

Segment number: 24

		EDIFACT	GS1	*	Description
	code				
3228	Country sub-entity name	C an..70	**O**		County/State, clear text.
3251	Postal identification code	C an..17	**D**		Postal Code
3207	Country name code	C an..3	**D**		ISO 3166 two alpha code

Segment Notes:

This segment is used to identify any parties related to the equipment specified in the EQD segment.

Example:
NAD+CK+3323456007896::9'

Dependency Notes:
The following composites and data elements are only used when a coded name and address can not be used.
The affected composites and data elements are as follows:
C080 - C059 - 3164 - C819 - 3251 - 3207

5. Segments Layout

Segment number: 25

SG25	- C	9999	-	CNI-DTM-CNT-TSR-MOA-FTX-SG31-SG32-SG33-SG38-SG43-SG50-SG70
CNI	- M	1	-	Consignment information

Function:

To identify one consignment.

		EDIFACT	GS1	*	Description
1490	Consolidation item number	C n..4	**R**		Serial number differentiating each separate consignment included in the consolidation.
C503	DOCUMENT/MESSAGE DETAILS	C	**O**		
1004	Document identifier	C an..35	**R**		Consignor shipment reference number.
1373	Document status code	C an..3	**O**		
1366	Document source description	C an..70	**N**		
3453	Language name code	C an..3	**N**		
1056	Version identifier	C an..9	**N**		
1060	Revision identifier	C an..6	**N**		
1312	Consignment load sequence identifier	C n..4	**O**		

Segment Notes:

This segment is used to identify a consignment included in the consolidation by its shipment reference number. In the IFTMnn messages the shipment reference number is provided in data element 1153 of the RFF segment at the message level using the code value 'CU'.

Example:
CNI+12+AVV23441'

5. Segments Layout

Segment number: 26

SG25	- C	9999 -	CNI-DTM-CNT-TSR-MOA-FTX-SG31-SG32-SG33-SG38-SG43-SG50-SG70
DTM	- C	9 -	Date/time/period

Function:

To specify date, and/or time, or period.

		EDIFACT	GS1	*	Description
C507	DATE/TIME/PERIOD	M	**M**		
2005	Date or time or period function code qualifier	M an..3	**M**	*	2 = Delivery date/time, requested 10 = Shipment date/time, requested 11 = Despatch date and/or time 17 = Delivery date/time, estimated 36 = Expiry date 63 = Delivery date/time, latest 64 = Delivery date/time, earliest 175 = Advise before date/time 200 = Pick-up/collection date/time of cargo 234 = Collection date/time, earliest 235 = Collection date/time, latest
2380	Date or time or period value	C an..35	**R**		
2379	Date or time or period format code	C an..3	**R**		102 = CCYYMMDD 203 = CCYYMMDDHHMM 719 = CCYYMMDDHHMM-CCYYMMDDHHMM

Segment Notes:

This segment is used to specify any dates related to the consignment identified in the CNI segment.

Example:
DTM+2:19960115:102'

5. Segments Layout

Segment number: 27

SG25	- C	9999	-	CNI-DTM-CNT-TSR-MOA-FTX-SG31-SG32-SG33-SG38-SG43-SG50-SG70
CNT	- C	9	-	Control total

Function:

To provide control total.

		EDIFACT	GS1	*	Description
C270	CONTROL	M	**M**		
6069	Control total type code qualifier	M an..3	**M**		11 = Total number of packages 15 = Total consignment, cube
6066	Control total value	M n..18	**M**		
6411	Measurement unit code	C an..3	**O**		

Segment Notes:

This segment is used to provide consignment control information such as, the total number of packages in the consignment.

Example:
CNT+11:42'

5. Segments Layout

Segment number: 28

SG25	- C	9999 -	CNI-DTM-CNT-TSR-MOA-FTX-SG31-SG32-SG33-SG38-SG43-SG50-SG70
TSR	- C	9 -	Transport service requirements

Function:

To specify the contract and carriage conditions and service and priority requirements for the transport.

		EDIFACT	GS1	*	Description
C536	CONTRACT AND CARRIAGE CONDITION	C	**O**		
4065	Contract and carriage condition code	M an..3	**M**		2 = Special agreement for parcels transport 3 = Special agreement for full loading transport 5 = FIATA combined transport bill of lading
1131	Code list identification code	C an..17	**O**		
3055	Code list responsible agency code	C an..3	**D**		
C233	SERVICE	C	**O**		
7273	Service requirement code	M an..3	**M**		1 = Carrier loads 4 = Shipper loads 13 = Carrier unloads 15 = Consignee unloads
1131	Code list identification code	C an..17	**O**		
3055	Code list responsible agency code	C an..3	**D**		
7273	Service requirement code	C an..3	**O**		
1131	Code list identification code	C an..17	**O**		
3055	Code list responsible agency code	C an..3	**D**		
C537	TRANSPORT PRIORITY	C	**O**		
4219	Transport service priority code	M an..3	**M**		1 = Express 2 = High speed 3 = Normal speed
1131	Code list identification code	C an..17	**O**		
3055	Code list responsible agency code	C an..3	**D**		
C703	NATURE OF CARGO	C	**N**		
7085	Cargo type classification code	M an..3			
1131	Code list identification code	C an..17			
3055	Code list responsible agency code	C an..3			

Segment Notes:

This segment is used to indicate any special contracts, services or priorities related to the current consignment.

Example:
TSR+3+1'

5. Segments Layout

Segment number: 29

SG25	- C	9999 -	CNI-DTM-CNT-TSR-MOA-FTX-SG31-SG32-SG33-SG38-SG43-SG50-SG70
MOA	- C	99 -	Monetary amount

Function:

To specify a monetary amount.

		EDIFACT	GS1	*	Description
C516	MONETARY AMOUNT	M	**M**		
5025	Monetary amount type code qualifier	M an..3	**M**		22 = Cash on delivery amount 40 = Customs value 44 = Declared value for carriage 157 = Insurance value
5004	Monetary amount	C n..35	**R**		
6345	Currency identification code	C an..3	**O**		
6343	Currency type code qualifier	C an..3	**N**		
4405	Status description code	C an..3	**N**		

Segment Notes:

This segment is used to specify monetary values related to the current consignment.

Example:
MOA+157:62112'

5. Segments Layout

Segment number: 30

SG25	- C	9999 -	CNI-DTM-CNT-TSR-MOA-FTX-SG31-SG32-SG33-SG38-SG43-SG50-SG70
FTX	- C	99 -	Free text

Function:

To provide free form or coded text information.

		EDIFACT	GS1	*	Description
4451	Text subject code qualifier	M an..3	**M**		AAI = General information BLR = Transport document remarks DEL = Delivery information HAN = Handling instructions
4453	Free text function code	C an..3	**O**		1 = Text for subsequent use
C107	TEXT REFERENCE	C	**D**		This composite is only used when trading partners have agreed to use mutually defined code values.
4441	Free text value code	M an..17	**M**		
1131	Code list identification code	C an..17	**O**		
3055	Code list responsible agency code	C an..3	**D**		91 = Assigned by supplier or supplier's agent 92 = Assigned by buyer or buyer's agent
C108	TEXT LITERAL	C	**D**		This composite is only used if coded text can not be used.
4440	Free text value	M an..512	**M**		
4440	Free text value	C an..512	**O**		
4440	Free text value	C an..512	**O**		
4440	Free text value	C an..512	**O**		
4440	Free text value	C an..512	**O**		
3453	Language name code	C an..3	**D**		ISO 639 two alpha code This data element is only used when non coded free text has been provided in data element C108.
4447	Free text format code	C an..3	**N**		

Segment Notes:

This segment is used to provide free form or coded text information related to consignment.
Use of this segment in free form is not recommended since it may inhibit automatic processing of the Forwarding and Consolidation Summary. Coded references to standard texts is an available functionality which enables automatic processing and reduces transmission overheads. Standard texts should be mutually defined between trading partners and can be used to cover legal or other requirements.

Example:
FTX+DEL+1+002::91'
(Code "002" is agreed to express = Please ensure complete delivery on requested date.)

5. Segments Layout

Segment number: 31

SG25	- C	9999 -	CNI-DTM-CNT-TSR-MOA-FTX-SG31-SG32-SG33-SG38-SG43-SG50-SG70
SG31	- C	2 -	TOD-LOC
TOD	- M	1 -	Terms of delivery or transport

Function:

To specify terms of delivery or transport.

		EDIFACT	GS1	*	Description
4055	Delivery or transport terms function code	C an..3	**R**		6 = Delivery condition
4215	Transport charges payment method code	C an..3	**O**		CC = Collect PP = Prepaid (by seller)
C100	TERMS OF DELIVERY OR TRANSPORT	C	**A**		
4053	Delivery or transport terms description code	C an..3	**R**		INCOTERMS (See EANCOM Codes Set) If INCOTERMS are applicable, then DE 3055 has to contain code value "9" and DE 1131 must be used.
1131	Code list identification code	C an..17	**D**		
3055	Code list responsible agency code	C an..3	**D**		
4052	Delivery or transport terms description	C an..70	**O**		
4052	Delivery or transport terms description	C an..70	**O**		

Segment Notes:

This segment is used to specify the terms of delivery for the current consignment.

Example:
TOD+6++CFR:2E:9'
TOD+6++CIF:2E:9'

5. Segments Layout

Segment number: 32

SG25	- C	9999 -	CNI-DTM-CNT-TSR-MOA-FTX-SG31-SG32-SG33-SG38-SG43-SG50-SG70
SG31	- C	2 -	TOD-LOC
LOC	- C	9 -	Place/location identification

Function:

To identify a place or a location and/or related locations.

		EDIFACT	GS1	*	Description
3227	Location function code qualifier	M an..3	**M**	*	1 = Place of terms of delivery
C517	LOCATION IDENTIFICATION	C	**A**		
3225	Location name code	C an..25	**A**		UN/LOCODE
1131	Code list identification code	C an..17	**O**		
3055	Code list responsible agency code	C an..3	**D**		3 = IATA (International Air Transport Association) 9 = GS1 DE 3055 must be used if DE 3225 is used and does not contain an UN/LOCODE.
3224	Location name	C an..256	**O**		
C519	RELATED LOCATION ONE IDENTIFICATION	C	**N**		
3223	First related location name code	C an..25			
1131	Code list identification code	C an..17			
3055	Code list responsible agency code	C an..3			
3222	First related location name	C an..70			
C553	RELATED LOCATION TWO IDENTIFICATION	C	**N**		
3233	Second related location name code	C an..25			
1131	Code list identification code	C an..17			
3055	Code list responsible agency code	C an..3			
3232	Second related location name	C an..70			
5479	Relation code	C an..3	**N**		

Segment Notes:

This segment is used to indicate the location to which the terms of delivery apply.

Example:
LOC+1+BE-BRU'

5. Segments Layout

Segment number: 33

SG25	- C	9999	-	CNI-DTM-CNT-TSR-MOA-FTX-SG31-SG32-SG33-SG38-SG43-SG50-SG70
SG32	- C	999	-	RFF-DTM
RFF	- M	1	-	Reference

Function:

To specify a reference.

		EDIFACT	GS1	*	Description
C506	REFERENCE	M	**M**		
1153	Reference code qualifier	M an..3	**M**		CT = Contract number LC = Letter of credit number
1154	Reference identifier	C an..70	**R**		
1156	Document line identifier	C an..6	**N**		
4000	Reference version identifier	C an..35	**N**		
1060	Revision identifier	C an..6	**N**		

Segment Notes:

This segment is used to specify any references related to the current consignment.

Example:
RFF+CT:76214'

5. Segments Layout

Segment number: 34

SG25	- C	9999	-	CNI-DTM-CNT-TSR-MOA-FTX-SG31-SG32-SG33-SG38-SG43-SG50-SG70
SG32	- C	999	-	RFF-DTM
DTM	- C	9	-	Date/time/period

Function:

To specify date, and/or time, or period.

		EDIFACT	GS1	*	Description
C507	DATE/TIME/PERIOD	M	**M**		
2005	Date or time or period function code qualifier	M an..3	**M**	*	171 = Reference date/time
2380	Date or time or period value	C an..35	**R**		
2379	Date or time or period format code	C an..3	**R**		102 = CCYYMMDD 203 = CCYYMMDDHHMM

Segment Notes:

This segment is used to specify any dates related to the previous RFF segment.

Example:
DTM+171:19931125:102'

5. Segments Layout

Segment number: 35

SG25	- C	9999	-	CNI-DTM-CNT-TSR-MOA-FTX-SG31-SG32-SG33-SG38-SG43-SG50-SG70
SG33	- C	9	-	GOR-DTM-LOC-SEL-FTX-SG34
GOR	- M	1	-	Governmental requirements

Function:

To indicate the requirement for a specific governmental action and/or procedure or which specific procedure is valid for a specific part of the transport.

		EDIFACT	GS1	*	Description
8323	Transport movement code	C an..3	**O**		1 = Export 2 = Import 3 = Transit
C232	GOVERNMENT ACTION	C	**R**		
9415	Government agency identification code	C an..3	**R**		5 = Customs 7 = Health certificate 10 = Live animals
9411	Government involvement code	C an..3	**O**		6 = Required
9417	Government action code	C an..3	**N**		
9353	Government procedure code	C an..3	**O**		1 = Already customs cleared in the importing country 2 = Documents requirements completed 5 = Inspection arrangements required
C232	GOVERNMENT ACTION	C	**O**		
9415	Government agency identification code	C an..3	**R**		
9411	Government involvement code	C an..3	**O**		
9417	Government action code	C an..3	**N**		
9353	Government procedure code	C an..3	**O**		
C232	GOVERNMENT ACTION	C	**O**		
9415	Government agency identification code	C an..3	**R**		
9411	Government involvement code	C an..3	**O**		
9417	Government action code	C an..3	**N**		
9353	Government procedure code	C an..3	**O**		
C232	GOVERNMENT ACTION	C	**O**		
9415	Government agency identification code	C an..3	**R**		
9411	Government involvement code	C an..3	**O**		
9417	Government action code	C an..3	**N**		
9353	Government procedure code	C an..3	**O**		

Segment Notes:

This segment is used to indicate any applicable governmental procedures and required action related to the import, export or transit of the current consignment, e.g. arrangements to be made for the inspection of the goods by customs at the time of export.

Example:
GOR+1+5:6::5'

5. Segments Layout

Segment number: 36

SG25	- C	9999 -	CNI-DTM-CNT-TSR-MOA-FTX-SG31-SG32-SG33-SG38-SG43-SG50-SG70
SG33	- C	9 -	GOR-DTM-LOC-SEL-FTX-SG34
DTM	- C	9 -	Date/time/period

Function:

To specify date, and/or time, or period.

		EDIFACT	GS1	*	Description
C507	DATE/TIME/PERIOD	M	**M**		
2005	Date or time or period function code qualifier	M an..3	**M**		182 = Issue date 192 = Expiration date/time of customs document
2380	Date or time or period value	C an..35	**R**		
2379	Date or time or period format code	C an..3	**R**		102 = CCYYMMDD

Segment Notes:

This segment is used to specify any dates or periods related to governmental procedures and/or documents for the current consignment, e.g. the expiration date of the related customs documents.

Example:
DTM+192:19990605:102'

5. Segments Layout

Segment number: 37

SG25	- C	9999 -	CNI-DTM-CNT-TSR-MOA-FTX-SG31-SG32-SG33-SG38-SG43-SG50-SG70
SG33	- C	9 -	GOR-DTM-LOC-SEL-FTX-SG34
LOC	- C	9 -	Place/location identification

Function:

To identify a place or a location and/or related locations.

		EDIFACT	GS1	*	Description
3227	Location function code qualifier	M an..3	**M**		42 = Customs office of exit 45 = Customs office of destination (transit)
C517	LOCATION IDENTIFICATION	C	**A**		
3225	Location name code	C an..25	**A**		UN/LOCODE
1131	Code list identification code	C an..17	**O**		
3055	Code list responsible agency code	C an..3	**D**		3 = IATA (International Air Transport Association) 9 = GS1 DE 3055 must be used if DE 3225 is used and does not contain an UN/LOCODE.
3224	Location name	C an..256	**O**		
C519	RELATED LOCATION ONE IDENTIFICATION	C	**N**		
3223	First related location name code	C an..25			
1131	Code list identification code	C an..17			
3055	Code list responsible agency code	C an..3			
3222	First related location name	C an..70			
C553	RELATED LOCATION TWO IDENTIFICATION	C	**N**		
3233	Second related location name code	C an..25			
1131	Code list identification code	C an..17			
3055	Code list responsible agency code	C an..3			
3232	Second related location name	C an..70			
5479	Relation code	C an..3	**N**		

Segment Notes:

This segment is used to identify any locations related to the governmental procedures for the current consignment, e.g. the customs office at which the consignment leaves the country.

Example:
LOC+42+BE-BRU'

5. Segments Layout

Segment number: 38

SG25	- C	9999 -	CNI-DTM-CNT-TSR-MOA-FTX-SG31-SG32-SG33-SG38-SG43-SG50-SG70
SG33	- C	9 -	GOR-DTM-LOC-SEL-FTX-SG34
SEL	- C	9 -	Seal number

Function:

To specify the seal number or a range of seal numbers.

		EDIFACT	GS1	*	Description
9308	Seal identifier	C an..35	**R**		
C215	SEAL ISSUER	C	**R**		
9303	Sealing party name code	C an..3	**R**		CA = Carrier CU = Customs SH = Shipper TO = Terminal operator
1131	Code list identification code	C an..17	**O**		
3055	Code list responsible agency code	C an..3	**D**		
9302	Sealing party name	C an..35	**O**		
4517	Seal condition code	C an..3	**O**		
C208	IDENTITY NUMBER RANGE	C	**N**		
7402	Object identifier	M an..35			
7402	Object identifier	C an..35			

Segment Notes:

This segment is used to specify a seal number and the sealing party for the current consignment, e.g. the carrier being responsible for sealing the truck(s).

Example:
SEL+4282+CA:::EUROLOG'

Dependency Notes:
The use of the SEL segment in the segment group 21 respectively 70 is recommended. Only if customs seals are involved in particular transport environments such as bonded goods the SEL segment in the segment group 33 should be used.

5. Segments Layout

Segment number: 39

SG25	- C	9999 -	CNI-DTM-CNT-TSR-MOA-FTX-SG31-SG32-SG33-SG38-SG43-SG50-SG70
SG33	- C	9 -	GOR-DTM-LOC-SEL-FTX-SG34
FTX	- C	9 -	Free text

Function:

To provide free form or coded text information.

		EDIFACT	GS1	*	Description
4451	Text subject code qualifier	M an..3	**M**		CIP = Customs clearance instruction import
4453	Free text function code	C an..3	**O**		1 = Text for subsequent use 3 = Text for immediate use
C107	TEXT REFERENCE	C	**D**		This composite is only used when trading partners have agreed to use mutually defined code values.
4441	Free text value code	M an..17	**M**		
1131	Code list identification code	C an..17	**O**		
3055	Code list responsible agency code	C an..3	**D**		91 = Assigned by supplier or supplier's agent 92 = Assigned by buyer or buyer's agent
C108	TEXT LITERAL	C	**D**		This composite is only used if coded text can not be used.
4440	Free text value	M an..512	**M**		
4440	Free text value	C an..512	**O**		
4440	Free text value	C an..512	**O**		
4440	Free text value	C an..512	**O**		
4440	Free text value	C an..512	**O**		
3453	Language name code	C an..3	**D**		ISO 639 two alpha code This data element is only used when non coded free text has been provided in data element C108.
4447	Free text format code	C an..3	**N**		

Segment Notes:

This segment is used to specify additional information for the current consignment.
Use of this segment in free form is not recommended since it may inhibit automatic processing of the Forwarding and Consolidation Summary Message. Coded references to standard texts is an available functionality which enables automatic processing and reduces transmission and processing overheads. Standard texts should be mutually defined among trading partners and can be used to cover legal and other requirements.

Example:
FTX+CIP+1+001::91'

5. Segments Layout

Segment number: 40

SG25	- C	9999 -	CNI-DTM-CNT-TSR-MOA-FTX-SG31-SG32-SG33-SG38-SG43-SG50-SG70
SG33	- C	9 -	GOR-DTM-LOC-SEL-FTX-SG34
SG34	- C	9 -	DOC-DTM
DOC	- M	1 -	Document/message details

Function:

To identify documents and details directly related to it.

		EDIFACT	GS1	*	Description
C002	DOCUMENT/MESSAGE NAME	M	**M**		
1001	Document name code	C an..3	**R**		821 = Despatch note model T1 822 = Despatch note model T2
1131	Code list identification code	C an..17	**O**		
3055	Code list responsible agency code	C an..3	**D**		
1000	Document name	C an..35	**O**		
C503	DOCUMENT/MESSAGE DETAILS	C	**O**		
1004	Document identifier	C an..35	**R**		
1373	Document status code	C an..3	**O**		2 = Accompanying goods 4 = To arrive by separate EDI message 9 = To be printed 17 = Document with the goods
1366	Document source description	C an..70	**O**		
3453	Language name code	C an..3	**O**		ISO 639 two alpha
1056	Version identifier	C an..9	**N**		
1060	Revision identifier	C an..6	**N**		
3153	Communication medium type code	C an..3	**N**		
1220	Document copies required quantity	C n..2	**O**		
1218	Document originals required quantity	C n..2	**O**		

Segment Notes:

This segment is used to identify any documentation related to the current consignment which is required by government, e.g. despatch note model T2 that ascertains that all goods of the consignment were originally produced in a country of the European Community.

Example:
DOC+822+12345:2'

5. Segments Layout

Segment number: 41

SG25	- C	9999 -	CNI-DTM-CNT-TSR-MOA-FTX-SG31-SG32-SG33-SG38-SG43-SG50-SG70
SG33	- C	9 -	GOR-DTM-LOC-SEL-FTX-SG34
SG34	- C	9 -	DOC-DTM
DTM	- C	1 -	Date/time/period

Function:

To specify date, and/or time, or period.

		EDIFACT	GS1	*	Description
C507	DATE/TIME/PERIOD	M	**M**		
2005	Date or time or period function code qualifier	M an..3	**M**	*	7 = Effective date/time 36 = Expiry date 137 = Document/message date/time 273 = Validity period
2380	Date or time or period value	C an..35	**R**		
2379	Date or time or period format code	C an..3	**R**		102 = CCYYMMDD 203 = CCYYMMDDHHMM 718 = CCYYMMDD-CCYYMMDD

Segment Notes:

This segment is used to specify any dates related to the previous DOC segment, e.g. date of the despatch note model T2.

Example:
DTM+137:19990605:102'

5. Segments Layout

Segment number: 42

SG25	- C	9999 -	CNI-DTM-CNT-TSR-MOA-FTX-SG31-SG32-SG33-SG38-SG43-SG50-SG70
SG38	- C	99 -	TDT-DTM-SG39-SG40
TDT	- M	1 -	Details of transport

Function:

To specify the transport details such as mode of transport, means of transport, its conveyance reference number and the identification of the means of transport.

		EDIFACT	GS1	*	Description
8051	Transport stage code qualifier	M an..3	**M**		10 = Pre-carriage transport 20 = Main-carriage transport 30 = On-carriage transport
8028	Means of transport journey identifier	C an..17	**O**		Reference number covering the transport.
C220	MODE OF TRANSPORT	C	**A**		
8067	Transport mode name code	C an..3	**R**		10 = 20 = 30 = 40 = 60 =
8066	Transport mode name	C an..17	**N**		
C228	TRANSPORT MEANS	C	**O**		DE 8179 and DE 8178 are only used when the type of transport must be specifically identified, that is, a generic description such as road transport is unsuitable.
8179	Transport means description code	C an..8	**D**		23 = Rail bulk car 31 = Truck
8178	Transport means description	C an..17	**D**		
C040	CARRIER	C	**O**		
3127	Carrier identifier	C an..17	**A**		Global Location Number GLN - Format n13
1131	Code list identification code	C an..17	**O**		
3055	Code list responsible agency code	C an..3	**D**		9 = GS1
3128	Carrier name	C an..35	**O**		
8101	Transit direction indicator code	C an..3	**O**		BS = Buyer to supplier SB = Supplier to buyer
C401	EXCESS TRANSPORTATION INFORMATION	C	**N**		
8457	Excess transportation reason code	M an..3			
8459	Excess transportation responsibility code	M an..3			
7130	Customer shipment authorisation identifier	C an..17			
C222	TRANSPORT IDENTIFICATION	C	**O**		
8213	Transport means identification name identifier	C an..9	**O**		DE 3055 must be used if DE 8213 is used.
1131	Code list identification code	C an..17	**O**		

5. Segments Layout

Code list responsible agency				

5. Segments Layout

Segment number: 42

		EDIFACT	GS1	*	Description
3055	code	C an..3	**D**		
8212	Transport means identification name	C an..35	**R**		Vehicle licence plate/Aircraft number
8453	Transport means nationality code	C an..3	**O**		ISO 3166 two alpha code
8281	Transport means ownership indicator code	C an..3	**N**		

Segment Notes:

This segment is used to indicate the transport means, and where necessary, the carrier to be used for the current consignment. When used, it is mandatory to indicate the main carriage transport mode in this segment.

Example:
TDT+20++30+31'

5. Segments Layout

Segment number: 43

SG25	- C	9999 -	CNI-DTM-CNT-TSR-MOA-FTX-SG31-SG32-SG33-SG38-SG43-SG50-SG70
SG38	- C	99 -	TDT-DTM-SG39-SG40
DTM	- C	9 -	Date/time/period

Function:

To specify date, and/or time, or period.

		EDIFACT	GS1	*	Description
C507	DATE/TIME/PERIOD	M	**M**		
2005	Date or time or period function code qualifier	M an..3	**M**		133 = Departure date/time, estimated 190 = Transhipment date/time
2380	Date or time or period value	C an..35	**R**		
2379	Date or time or period format code	C an..3	**R**		102 = CCYYMMDD 203 = CCYYMMDDHHMM

Segment Notes:

This segment is used to specify dates relating to the transport means.

Example:
DTM+133:200212151000:203'

5. Segments Layout

Segment number: 44

SG25	- C	9999 -	CNI-DTM-CNT-TSR-MOA-FTX-SG31-SG32-SG33-SG38-SG43-SG50-SG70
SG38	- C	99 -	TDT-DTM-SG39-SG40
SG39	- C	99 -	LOC-DTM
LOC	- M	1 -	Place/location identification

Function:

To identify a place or a location and/or related locations.

		EDIFACT	GS1	*	Description
3227	Location function code qualifier	M an..3	**M**		9 = Place/port of loading 11 = Place/port of discharge
C517	LOCATION IDENTIFICATION	C	**A**		
3225	Location name code	C an..25	**A**		GLN - Format n13
1131	Code list identification code	C an..17	**O**		
3055	Code list responsible agency code	C an..3	**D**		9 = GS1 DE 3055 must be used if DE 3225 is used and does not contain an UN/LOCODE.
3224	Location name	C an..256	**O**		
C519	RELATED LOCATION ONE IDENTIFICATION	C	**N**		
3223	First related location name code	C an..25			
1131	Code list identification code	C an..17			
3055	Code list responsible agency code	C an..3			
3222	First related location name	C an..70			
C553	RELATED LOCATION TWO IDENTIFICATION	C	**N**		
3233	Second related location name code	C an..25			
1131	Code list identification code	C an..17			
3055	Code list responsible agency code	C an..3			
3232	Second related location name	C an..70			
5479	Relation code	C an..3	**N**		

Segment Notes:

This segment is used to identify locations relating to the transport details for the current consignment.

Example:
LOC+9+5412345678908::9'

5. Segments Layout

Segment number: 45

SG25	- C	9999	-	CNI-DTM-CNT-TSR-MOA-FTX-SG31-SG32-SG33-SG38-SG43-SG50-SG70
SG38	- C	99	-	TDT-DTM-SG39-SG40
SG39	- C	99	-	LOC-DTM
DTM	- C	9	-	Date/time/period

Function:

To specify date, and/or time, or period.

		EDIFACT	GS1	*	Description
C507	DATE/TIME/PERIOD	M	**M**		
2005	Date or time or period function code qualifier	M an..3	**M**		133 = Departure date/time, estimated 136 = Departure date/time
2380	Date or time or period value	C an..35	**R**		
2379	Date or time or period format code	C an..3	**R**		102 = CCYYMMDD 203 = CCYYMMDDHHMM

Segment Notes:

This segment is used to specify any dates related to the location identified for a specific stage of transport.

Example:
DTM+133:20021210:102'

5. Segments Layout

Segment number: 46

SG25	- C	9999	-	CNI-DTM-CNT-TSR-MOA-FTX-SG31-SG32-SG33-SG38-SG43-SG50-SG70
SG38	- C	99	-	TDT-DTM-SG39-SG40
SG40	- C	9	-	RFF-DTM
RFF	- M	1	-	Reference

Function:

To specify a reference.

		EDIFACT	GS1	*	Description
C506	REFERENCE	M	**M**		
1153	Reference code qualifier	M an..3	**M**		AWB = Air waybill number BM = Bill of lading number CMR = Road consignment note number RCN = Railway consignment note number
1154	Reference identifier	C an..70	**R**		
1156	Document line identifier	C an..6	**N**		
4000	Reference version identifier	C an..35	**N**		
1060	Revision identifier	C an..6	**N**		

Segment Notes:

This segment is used to specify references related to the transport details for the current consignment.

Example:
RFF+AWB:2345362'

5. Segments Layout

Segment number: 47

SG25	- C	9999	-	CNI-DTM-CNT-TSR-MOA-FTX-SG31-SG32-SG33-SG38-SG43-SG50-SG70
SG38	- C	99	-	TDT-DTM-SG39-SG40
SG40	- C	9	-	RFF-DTM
DTM	- C	1	-	Date/time/period

Function:

To specify date, and/or time, or period.

		EDIFACT	GS1	*	Description
C507	DATE/TIME/PERIOD	M	**M**		
2005	Date or time or period function code qualifier	M an..3	**M**	*	171 = Reference date/time
2380	Date or time or period value	C an..35	**R**		
2379	Date or time or period format code	C an..3	**R**		102 = CCYYMMDD 203 = CCYYMMDDHHMM 718 = CCYYMMDD-CCYYMMDD

Segment Notes:

This segment is used to specify any dates related to the previous RFF segment.

Example:
DTM+171:20021210:102'

5. Segments Layout

Segment number: 48

SG25	- C	9999 -	CNI-DTM-CNT-TSR-MOA-FTX-SG31-SG32-SG33-SG38-SG43-SG50-SG70
SG43	- C	99 -	NAD-LOC-MOA-SG44-SG45-SG47
NAD	- M	1 -	Name and address

Function:

To specify the name/address and their related function, either by C082 only and/or unstructured by C058 or structured by C080 thru 3207.

		EDIFACT	GS1	*	Description
3035	Party function code qualifier	M an..3	**M**		CN = Consignee DP = Delivery party FP = Freight/charges payer
C082	PARTY IDENTIFICATION DETAILS	C	**A**		
3039	Party identifier	M an..35	**M**		For identification of parties it is recommended to use GLN - Format n13.
1131	Code list identification code	C an..17	**N**		
3055	Code list responsible agency code	C an..3	**R**		9 = GS1
C058	NAME AND ADDRESS	C	**C**		
3124	Name and address description	M an..35	**M**		
3124	Name and address description	C an..35	**O**		
3124	Name and address description	C an..35	**O**		
3124	Name and address description	C an..35	**O**		
3124	Name and address description	C an..35	**O**		
C080	PARTY NAME	C	**D**		
3036	Party name	M an..35	**M**		Party Name in clear text.
3036	Party name	C an..35	**O**		
3036	Party name	C an..35	**O**		
3036	Party name	C an..35	**O**		
3036	Party name	C an..35	**O**		
3045	Party name format code	C an..3	**O**		
C059	STREET	C	**D**		
3042	Street and number or post office box identifier	M an..35	**M**		Building Name/Number and Street
3042	Street and number or post office box identifier	C an..35	**O**		Name and/or P.O. Box
3042	Street and number or post office box identifier	C an..35	**O**		
3042	Street and number or post office box identifier	C an..35	**O**		
3164	City name	C an..35	**D**		City/Town, clear text
C819	COUNTRY SUB-ENTITY DETAILS	C	**D**		
3229	Country sub-entity name code	C an..9	**O**		
1131	Code list identification code	C an..17	**O**		
	Code list responsible agency				

5. Segments Layout

Segment number: 48

		EDIFACT	GS1	*	Description
3055	code	C an..3	**O**		
3228	Country sub-entity name	C an..70	**O**		County/State, clear text.
3251	Postal identification code	C an..17	**D**		Postal Code
3207	Country name code	C an..3	**D**		ISO 3166 two alpha code

Segment Notes:

This segment is used to identify the consignee for the currently identified consignment.

Example:
NAD+CN+5411234512309::9'

Dependency Notes:
The following composites and data elements are only used when a coded name and address can not be used.
The affected composites and data elements are as follows:
C080 - C059 - 3164 - C819 - 3251 - 3207

5. Segments Layout

Segment number: 49

SG25	- C	9999 -	CNI-DTM-CNT-TSR-MOA-FTX-SG31-SG32-SG33-SG38-SG43-SG50-SG70
SG43	- C	99 -	NAD-LOC-MOA-SG44-SG45-SG47
LOC	- C	9 -	Place/location identification

Function:

To identify a place or a location and/or related locations.

		EDIFACT	GS1	*	Description
3227	Location function code qualifier	M an..3	**M**	*	7 = Place of delivery 10 = Place of acceptance
C517	LOCATION IDENTIFICATION	C	**A**		
3225	Location name code	C an..25	**A**		GLN - Format n13
1131	Code list identification code	C an..17	**O**		
3055	Code list responsible agency code	C an..3	**D**		9 = GS1 DE 3055 must be used if DE 3225 is used and does not contain an UN/LOCODE.
3224	Location name	C an..256	**O**		
C519	RELATED LOCATION ONE IDENTIFICATION	C	**N**		
3223	First related location name code	C an..25			
1131	Code list identification code	C an..17			
3055	Code list responsible agency code	C an..3			
3222	First related location name	C an..70			
C553	RELATED LOCATION TWO IDENTIFICATION	C	**N**		
3233	Second related location name code	C an..25			
1131	Code list identification code	C an..17			
3055	Code list responsible agency code	C an..3			
3232	Second related location name	C an..70			
5479	Relation code	C an..3	**N**		

Segment Notes:

This segment is used to identify any locations related to the party identified in the NAD segment.
It is recommended to use Global Location Numbers GLN - Format n13 - for the identification of locations.

Example:
LOC+7+5412345678908::9'

5. Segments Layout

Segment number: 50

SG25	- C	9999 -	CNI-DTM-CNT-TSR-MOA-FTX-SG31-SG32-SG33-SG38-SG43-SG50-SG70
SG43	- C	99 -	NAD-LOC-MOA-SG44-SG45-SG47
MOA	- C	9 -	Monetary amount

Function:

To specify a monetary amount.

		EDIFACT	GS1	*	Description
C516	MONETARY AMOUNT	M	**M**		
5025	Monetary amount type code qualifier	M an..3	**M**		22 = Cash on delivery amount 50 = Disbursements
5004	Monetary amount	C n..35	**R**		
6345	Currency identification code	C an..3	**O**		
6343	Currency type code qualifier	C an..3	**N**		
4405	Status description code	C an..3	**N**		

Segment Notes:

This segment is used to indicate monetary amounts for the party receiving the goods.

Example:
MOA+22:15000:EUR'

5. Segments Layout

Segment number: 51

SG25	- C	9999	-	CNI-DTM-CNT-TSR-MOA-FTX-SG31-SG32-SG33-SG38-SG43-SG50-SG70
SG43	- C	99	-	NAD-LOC-MOA-SG44-SG45-SG47
SG44	- C	9	-	CTA-COM
CTA	- M	1	-	Contact information

Function:

To identify a person or a department to whom communication should be directed.

		EDIFACT	GS1	*	Description
3139	Contact function code	C an..3	**R**		IC = Information contact
C056	DEPARTMENT OR EMPLOYEE DETAILS	C	**O**		
3413	Department or employee name code	C an..17	**O**		
3412	Department or employee name	C an..35	**O**		

Segment Notes:

This segment is used to provide department and contact names within the party identified in the NAD segment.

Example:
CTA+TR+:G REID'

5. Segments Layout

Segment number: 52

SG25	- C	9999	-	CNI-DTM-CNT-TSR-MOA-FTX-SG31-SG32-SG33-SG38-SG43-SG50-SG70
SG43	- C	99	-	NAD-LOC-MOA-SG44-SG45-SG47
SG44	- C	9	-	CTA-COM
COM	- C	9	-	Communication contact

Function:

To identify a communication number of a department or a person to whom communication should be directed.

		EDIFACT	GS1	*	Description
C076	COMMUNICATION CONTACT	M	**M**		
3148	Communication address identifier	M an..512	**M**		
3155	Communication address code qualifier	M an..3	**M**		EM = Electronic mail TE = Telephone WWW = WWW-Site (GS1 Temporary Code)

Segment Notes:

This segment identifies the communications number and type of communications for the person or department identified in the previous CTA segment.

Example:
COM+0033148759632:FX'

5. Segments Layout

Segment number: 53

SG25	- C	9999 -	CNI-DTM-CNT-TSR-MOA-FTX-SG31-SG32-SG33-SG38-SG43-SG50-SG70
SG43	- C	99 -	NAD-LOC-MOA-SG44-SG45-SG47
SG45	- C	9 -	DOC-DTM
DOC	- M	1 -	Document/message details

Function:

To identify documents and details directly related to it.

		EDIFACT	GS1	*	Description
C002	DOCUMENT/MESSAGE NAME	M	**M**		
1001	Document name code	C an..3	**R**		811 = Export licence 911 = Import licence
1131	Code list identification code	C an..17	**O**		
3055	Code list responsible agency code	C an..3	**D**		
1000	Document name	C an..35	**N**		
C503	DOCUMENT/MESSAGE DETAILS	C	**O**		
1004	Document identifier	C an..35	**R**		
1373	Document status code	C an..3	**N**		
1366	Document source description	C an..70	**O**		
3453	Language name code	C an..3	**O**		ISO 639 two alpha
1056	Version identifier	C an..9	**N**		
1060	Revision identifier	C an..6	**N**		
3153	Communication medium type code	C an..3	**N**		
1220	Document copies required quantity	C n..2	**O**		
1218	Document originals required quantity	C n..2	**O**		

Segment Notes:

This segment is used to identify any documentation which is required by the party identified in the NAD segment.

Example:
DOC+811+1253D'

5. Segments Layout

Segment number: 54

SG25	- C	9999	-	CNI-DTM-CNT-TSR-MOA-FTX-SG31-SG32-SG33-SG38-SG43-SG50-SG70
SG43	- C	99	-	NAD-LOC-MOA-SG44-SG45-SG47
SG45	- C	9	-	DOC-DTM
DTM	- C	1	-	Date/time/period

Function:

To specify date, and/or time, or period.

		EDIFACT	GS1	*	Description
C507	DATE/TIME/PERIOD	M	**M**		
2005	Date or time or period function code qualifier	M an..3	**M**	*	7 = Effective date/time 36 = Expiry date 137 = Document/message date/time 273 = Validity period
2380	Date or time or period value	C an..35	**R**		
2379	Date or time or period format code	C an..3	**R**		102 = CCYYMMDD 203 = CCYYMMDDHHMM 718 = CCYYMMDD-CCYYMMDD

Segment Notes:

This segment is used to specify any dates related to the previous DOC segment.

Example:
DTM+137:19931210:102'

5. Segments Layout

Segment number: 55

SG25	- C	9999	-	CNI-DTM-CNT-TSR-MOA-FTX-SG31-SG32-SG33-SG38-SG43-SG50-SG70
SG43	- C	99	-	NAD-LOC-MOA-SG44-SG45-SG47
SG47	- C	9	-	RFF
RFF	- M	1	-	Reference

Function:

To specify a reference.

		EDIFACT	GS1	*	Description
C506	REFERENCE	M	**M**		
1153	Reference code qualifier	M an..3	**M**		CT = Contract number
1154	Reference identifier	C an..70	**R**		
1156	Document line identifier	C an..6	**N**		
4000	Reference version identifier	C an..35	**N**		
1060	Revision identifier	C an..6	**N**		

Segment Notes:

This segment is used to identify any references related to the party identified in the NAD segment which are required but do not accompany the consignment, e.g., contract numbers.

Example:
RFF+CT:6532'

5. Segments Layout

Segment number: 56

SG25	- C	9999 -	CNI-DTM-CNT-TSR-MOA-FTX-SG31-SG32-SG33-SG38-SG43-SG50-SG70
SG50	- C	999 -	GID-HAN-TMP-RNG-MOA-PIA-FTX-SG51-GDS-SG52-SG53-SG54-SG55-SG56-SG61-SG65
GID	- M	1 -	Goods item details

Function:

To indicate totals of a goods item.

		EDIFACT	GS1	*	Description
1496	Goods item number	C n..5	**R**		Application number identifying the goods item within the current consignment.
C213	NUMBER AND TYPE OF PACKAGES	C	**R**		
7224	Package quantity	C n..8	**R**		
7065	Package type description code	C an..17	**O**		CT = PK = 09 = Returnable pallet (GS1 Temporary Code) 201 = Pallet ISO 1 - 1/1 EURO Pallet (GS1 Temporary Code)
1131	Code list identification code	C an..17	**N**		
3055	Code list responsible agency code	C an..3	**D**	*	9 = GS1
7064	Type of packages	C an..35	**N**		
7233	Packaging related description code	C an..3	**N**		
C213	NUMBER AND TYPE OF PACKAGES	C	**O**		
7224	Package quantity	C n..8	**O**		
7065	Package type description code	C an..17	**O**		CT = PK = 09 = Returnable pallet (GS1 Temporary Code) 201 = Pallet ISO 1 - 1/1 EURO Pallet (GS1 Temporary Code)
1131	Code list identification code	C an..17	**N**		
3055	Code list responsible agency code	C an..3	**D**	*	9 = GS1
7064	Type of packages	C an..35	**N**		
7233	Packaging related description code	C an..3	**N**		
C213	NUMBER AND TYPE OF PACKAGES	C	**O**		
7224	Package quantity	C n..8	**O**		
7065	Package type description code	C an..17	**O**		CT = PK = 09 = Returnable pallet (GS1 Temporary Code) 201 = Pallet ISO 1 - 1/1 EURO Pallet (GS1 Temporary Code)

5. Segments Layout

1131	Code list identification code	C an..17	**N**		

5. Segments Layout

Segment number: 56

		EDIFACT	GS1	*	Description
3055	Code list responsible agency code	C an..3	**D**	*	9 = GS1
7064	Type of packages	C an..35	**N**		
7233	Packaging related description code	C an..3	**N**		
C213	NUMBER AND TYPE OF PACKAGES	C	**O**		
7224	Package quantity	C n..8	**O**		
7065	Package type description code	C an..17	**O**		CT = PK = 09 = Returnable pallet (GS1 Temporary Code) 201 = Pallet ISO 1 - 1/1 EURO Pallet (GS1 Temporary Code)
1131	Code list identification code	C an..17	**N**		
3055	Code list responsible agency code	C an..3	**D**	*	9 = GS1
7064	Type of packages	C an..35	**N**		
7233	Packaging related description code	C an..3	**N**		
C213	NUMBER AND TYPE OF PACKAGES	C	**O**		
7224	Package quantity	C n..8	**O**		
7065	Package type description code	C an..17	**O**		CT = PK = 09 = Returnable pallet (GS1 Temporary Code) 201 = Pallet ISO 1 - 1/1 EURO Pallet (GS1 Temporary Code)
1131	Code list identification code	C an..17	**N**		
3055	Code list responsible agency code	C an..3	**D**	*	9 = GS1
7064	Type of packages	C an..35	**N**		
7233	Packaging related description code	C an..3	**N**		

Segment Notes:

This segment is used to specify the number and type of packages which make up a goods item in the current consignment.
Within the GID segment it is possible to identify up to 3 levels of packaging hierarchy for the transport goods item.
Despatch units are identified in the first occurence of C213.

Example:
GID+1+1:09::9+6:CT'
(The top level is 1 returnable pallet containing a second level of 6 cartons.)

Dependency note:
DE 3055: This data element is only used with the code value '9' if an GS1 code is used in data element 7065.

5. Segments Layout

Segment number: 57

SG25	- C	9999 -	CNI-DTM-CNT-TSR-MOA-FTX-SG31-SG32-SG33-SG38-SG43-SG50-SG70
SG50	- C	999 -	GID-HAN-TMP-RNG-MOA-PIA-FTX-SG51-GDS-SG52-SG53-SG54-SG55-SG56-SG61-SG65
HAN	- C	1 -	Handling instructions

Function:

To specify handling and where necessary, notify hazards.

		EDIFACT	GS1	*	Description
C524	HANDLING INSTRUCTIONS	C	**O**		
4079	Handling instruction description code	C an..3	**R**		BIG = Outsized (GS1 Temporary Code) CRU = Crushable (GS1 Temporary Code) EAT = Foodstuffs (GS1 Temporary Code) HWC = Handle with care (GS1 Temporary Code) STR = Stacking restricted (GS1 Temporary Code) UST = Unstackable (GS1 Temporary Code)
1131	Code list identification code	C an..17	**A**		
3055	Code list responsible agency code	C an..3	**D**	*	9 = GS1 60 = Assigned by national trade agency DE 3055 must be used if DE 4079 is used and does not contain an EDIFACT code.
4078	Handling instruction description	C an..70	**O**		
C218	HAZARDOUS MATERIAL	C	**O**		The identification of hazardous materials is carried out using the DGS and FTX segments in the CNI level.
7419	Hazardous material category name code	C an..7	**D**		The preferred way to provide 'ADR international classification' or 'Hazardous material standard text' is to use DE 1131.
1131	Code list identification code	C an..17	**O**		ADR = Accord Europeen au transport international dangereuses (GS1 Temporary Code) HMT = Hazardous material standard text (GS1 Temporary Code)
3055	Code list responsible agency code	C an..3	**D**	*	9 = GS1
7418	Hazardous material category name	C an..35	**O**		To be used when no code value is available for DE7419.

Segment Notes:

This segment is used to provide a handling instruction relevant to the transport line item identified in the GID segment.

Example:
HAN+EAT::9'

5. Segments Layout

Segment number: 58

SG25	- C	9999 -	CNI-DTM-CNT-TSR-MOA-FTX-SG31-SG32-SG33-SG38-SG43-SG50-SG70
SG50	- C	999 -	GID-HAN-TMP-RNG-MOA-PIA-FTX-SG51-GDS-SG52-SG53-SG54-SG55-SG56-SG61-SG65
TMP	- C	1 -	Temperature

Function:

To specify the temperature setting.

		EDIFACT	GS1	*	Description
6245	Temperature type code qualifier	M an..3	**M**		1 = Storage temperature 2 = Transport temperature
C239	TEMPERATURE SETTING	C	**A**		
6246	Temperature value	C n..15	**R**		
6411	Measurement unit code	C an..3	**R**		CEL = degree celsius FAH = degree Fahrenheit

Segment Notes:

This segment is used to specify a temperature setting related to the current goods item.

Example:
TMP+1+40:CEL'

5. Segments Layout

Segment number: 59

SG25	- C	9999 -	CNI-DTM-CNT-TSR-MOA-FTX-SG31-SG32-SG33-SG38-SG43-SG50-SG70
SG50	- C	999 -	GID-HAN-TMP-RNG-MOA-PIA-FTX-SG51-GDS-SG52-SG53-SG54-SG55-SG56-SG61-SG65
RNG	- C	1 -	Range details

Function:

To identify a range.

		EDIFACT	GS1	*	Description
6167	Range type code qualifier	M an..3	**M**	*	5 = Temperature range
C280	RANGE	C	**R**		
6411	Measurement unit code	M an..3	**M**		CEL = degree celsius FAH = degree Fahrenheit
6162	Range minimum value	C n..18	**O**		
6152	Range maximum value	C n..18	**O**		

Segment Notes:

This segment is used to specify a temperature range for the current goods item.

Example:
RNG+5+CEL:40:45'

5. Segments Layout

Segment number: 60

SG25	- C	9999 -	CNI-DTM-CNT-TSR-MOA-FTX-SG31-SG32-SG33-SG38-SG43-SG50-SG70
SG50	- C	999 -	GID-HAN-TMP-RNG-MOA-PIA-FTX-SG51-GDS-SG52-SG53-SG54-SG55-SG56-SG61-SG65
MOA	- C	9 -	Monetary amount

Function:

To specify a monetary amount.

		EDIFACT	GS1	*	Description
C516	MONETARY AMOUNT	M	**M**		
5025	Monetary amount type code qualifier	M an..3	**M**		40 = Customs value 44 = Declared value for carriage 157 = Insurance value
5004	Monetary amount	C n..35	**R**		
6345	Currency identification code	C an..3	**O**		ISO 4217 three alpha
6343	Currency type code qualifier	C an..3	**N**		
4405	Status description code	C an..3	**N**		

Segment Notes:

This segment is used to specify the value of the current goods item for customs, insurance or other valuation purposes.

Example:
MOA+40:45300:EUR'

5. Segments Layout

Segment number: 61

SG25	- C	9999 -	CNI-DTM-CNT-TSR-MOA-FTX-SG31-SG32-SG33-SG38-SG43-SG50-SG70
SG50	- C	999 -	GID-HAN-TMP-RNG-MOA-PIA-FTX-SG51-GDS-SG52-SG53-SG54-SG55-SG56-SG61-SG65
PIA	- C	9 -	Additional product id

Function:

To specify additional or substitutional item identification codes.

		EDIFACT	GS1	*	Description
4347	Product identifier code qualifier	M an..3	**M**	*	1 = Additional identification 5 = Product identification Product Id function, coded has the following restricted coded function: 1 = Additional Identification - To provide an additional identity of the current goods item identified in the GID segment, e.g. Harmonised system code. 5 = Product Identification - To provide the GTIN of the products contained in the current goods item identified in the GID segment.
C212	ITEM NUMBER IDENTIFICATION	M	**M**		
7140	Item identifier	C an..35	**R**		
7143	Item type identification code	C an..3	**R**		HS = Harmonised system SRV = GS1 Global Trade Item Number
1131	Code list identification code	C an..17	**O**		
3055	Code list responsible agency code	C an..3	**D**		9 = GS1 89 = Assigned by distributor 91 = Assigned by supplier or supplier's agent 92 = Assigned by buyer or buyer's agent
C212	ITEM NUMBER IDENTIFICATION	C	**O**		
7140	Item identifier	C an..35	**R**		
7143	Item type identification code	C an..3	**R**		
1131	Code list identification code	C an..17	**O**		
3055	Code list responsible agency code	C an..3	**D**		
C212	ITEM NUMBER IDENTIFICATION	C	**O**		
7140	Item identifier	C an..35	**R**		
7143	Item type identification code	C an..3	**R**		
1131	Code list identification code	C an..17	**O**		
3055	Code list responsible agency code	C an..3	**D**		
C212	ITEM NUMBER IDENTIFICATION	C	**O**		
7140	Item identifier	C an..35	**R**		
7143	Item type identification code	C an..3	**R**		
1131	Code list identification code	C an..17	**O**		
3055	Code list responsible agency code	C an..3	**D**		

5. Segments Layout

Segment number: 61

		EDIFACT	GS1	*	Description
C212	ITEM NUMBER IDENTIFICATION	C	**O**		
7140	Item identifier	C an..35	**R**		
7143	Item type identification code	C an..3	**R**		
1131	Code list identification code	C an..17	**O**		
3055	Code list responsible agency code	C an..3	**D**		

Segment Notes:

This segment is used to specify additional product identification codes for the current goods item.
Code values provided in this segment are provided for information purposes and not for the identification of the goods to be consigned. The identification of the goods to be consigned is carried out in the GID segment.

Example:
PIA+1+HS003211:HS'

5. Segments Layout

Segment number: 62

SG25	- C	9999 -	CNI-DTM-CNT-TSR-MOA-FTX-SG31-SG32-SG33-SG38-SG43-SG50-SG70
SG50	- C	999 -	GID-HAN-TMP-RNG-MOA-PIA-FTX-SG51-GDS-SG52-SG53-SG54-SG55-SG56-SG61-SG65
FTX	- C	9 -	Free text

Function:

To provide free form or coded text information.

		EDIFACT	GS1	*	Description
4451	Text subject code qualifier	M an..3	**M**		AAA = Goods description AAI = General information
4453	Free text function code	C an..3	**O**		1 = Text for subsequent use
C107	TEXT REFERENCE	C	**D**		This composite is only used when trading partners have agreed to use mutually defined code values.
4441	Free text value code	M an..17	**M**		
1131	Code list identification code	C an..17	**O**		
3055	Code list responsible agency code	C an..3	**D**		9 = GS1 91 = Assigned by supplier or supplier's agent 92 = Assigned by buyer or buyer's agent
C108	TEXT LITERAL	C	**D**		This composite is only used if coded text can not be used.
4440	Free text value	M an..512	**M**		
4440	Free text value	C an..512	**O**		
4440	Free text value	C an..512	**O**		
4440	Free text value	C an..512	**O**		
4440	Free text value	C an..512	**O**		
3453	Language name code	C an..3	**D**		ISO 639 two alpha code This data element is only used when non coded free text has been provided in data element C108.
4447	Free text format code	C an..3	**N**		

Segment Notes:

This segment is used to provide free form or coded text information related to the goods item.
Use of this segment in free form is not recommended since it may inhibit automatic processing of the Forwarding and Consolidation Summary. Coded references to standard texts is an available functionality which enables automatic processing and reduces transmission overheads. Standard texts should be mutually defined between trading partners and can be used to cover legal or other requirements.

Example:
FTX+AAA+++SPARE PARTS COMPUTER MB'

5. Segments Layout

Segment number: 63

SG25	- C	9999 -	CNI-DTM-CNT-TSR-MOA-FTX-SG31-SG32-SG33-SG38-SG43-SG50-SG70
SG50	- C	999 -	GID-HAN-TMP-RNG-MOA-PIA-FTX-SG51-GDS-SG52-SG53-SG54-SG55-SG56-SG61-SG65
SG51	- C	9 -	NAD-DTM
NAD	- M	1 -	Name and address

Function:

To specify the name/address and their related function, either by C082 only and/or unstructured by C058 or structured by C080 thru 3207.

		EDIFACT	GS1	*	Description
3035	Party function code qualifier	M an..3	**M**	*	DP = Delivery party PW = Despatch party SU = Supplier
C082	PARTY IDENTIFICATION DETAILS	C	**A**		
3039	Party identifier	M an..35	**M**		For identification of parties it is recommended to use GLN - Format n13.
1131	Code list identification code	C an..17	**N**		
3055	Code list responsible agency code	C an..3	**R**	*	9 = GS1
C058	NAME AND ADDRESS	C	**O**		This composite may only be used to fulfill the requirements of directive 2003/58/EC, article 4.
3124	Name and address description	M an..35	**M**		
3124	Name and address description	C an..35	**O**		
3124	Name and address description	C an..35	**O**		
3124	Name and address description	C an..35	**O**		
3124	Name and address description	C an..35	**O**		
C080	PARTY NAME	C	**D**		
3036	Party name	M an..35	**M**		Party Name in clear text.
3036	Party name	C an..35	**O**		
3036	Party name	C an..35	**O**		
3036	Party name	C an..35	**O**		
3036	Party name	C an..35	**O**		
3045	Party name format code	C an..3	**O**		
C059	STREET	C	**D**		
3042	Street and number or post office box identifier	M an..35	**M**		Building Name/Number and Street
3042	Street and number or post office box identifier	C an..35	**O**		Name and/or P.O. Box
3042	Street and number or post office box identifier	C an..35	**O**		
3042	Street and number or post office box identifier	C an..35	**O**		
3164	City name	C an..35	**D**		City/Town, clear text.
C819	COUNTRY SUB-ENTITY DETAILS	C	**D**		

5. Segments Layout

Segment number: 63

		EDIFACT	GS1	*	Description
3229	Country sub-entity name code	C an..9	**O**		
1131	Code list identification code	C an..17	**O**		
3055	Code list responsible agency code	C an..3	**O**		
3228	Country sub-entity name	C an..70	**O**		County/State, clear text.
3251	Postal identification code	C an..17	**D**		Postal Code
3207	Country name code	C an..3	**D**		ISO 3166 two alpha code

Segment Notes:

This segment is used to specify the delivery and despatch parties for the current goods item.
Only two repeats of this segment are allowed per goods item.

Example:
NAD+PW+5411234512309::9'
NAD+DP+5412345123453::9'

Dependency Notes:
The following composites and data elements are only used when a coded name and address can not be used.
The affected composites and data elements are as follows:
C080 - C059 - 3164 - C819 - 3251 - 3207

5. Segments Layout

Segment number: 64

SG25	- C	9999 -	CNI-DTM-CNT-TSR-MOA-FTX-SG31-SG32-SG33-SG38-SG43-SG50-SG70
SG50	- C	999 -	GID-HAN-TMP-RNG-MOA-PIA-FTX-SG51-GDS-SG52-SG53-SG54-SG55-SG56-SG61-SG65
SG51	- C	9 -	NAD-DTM
DTM	- C	1 -	Date/time/period

Function:

To specify date, and/or time, or period.

		EDIFACT	GS1	*	Description
C507	DATE/TIME/PERIOD	M	**M**		
2005	Date or time or period function code qualifier	M an..3	**M**	*	2 = Delivery date/time, requested 10 = Shipment date/time, requested 63 = Delivery date/time, latest 64 = Delivery date/time, earliest 191 = Delivery date/time, expected 200 = Pick-up/collection date/time of cargo
2380	Date or time or period value	C an..35	**R**		
2379	Date or time or period format code	C an..3	**R**		102 = CCYYMMDD 203 = CCYYMMDDHHMM 718 = CCYYMMDD-CCYYMMDD

Segment Notes:

This segment is used to specify dates and times related to the despatch or delivery parties specified in the previous NAD segment.

Example:
DTM+191:19960120:102'

5. Segments Layout

Segment number: 65

SG25	- C	9999	-	CNI-DTM-CNT-TSR-MOA-FTX-SG31-SG32-SG33-SG38-SG43-SG50-SG70
SG50	- C	999	-	GID-HAN-TMP-RNG-MOA-PIA-FTX-SG51-GDS-SG52-SG53-SG54-SG55-SG56-SG61-SG65
GDS	- C	9	-	Nature of cargo

Function:

To indicate the type of cargo as a general classification.

		EDIFACT	GS1	*	Description
C703	NATURE OF CARGO	C	**R**		
7085	Cargo type classification code	M an..3	**M**		11 = Hazardous cargo 12 = General cargo
1131	Code list identification code	C an..17	**O**		
3055	Code list responsible agency code	C an..3	**D**		

Segment Notes:

This segment is used to specify the exact nature of the goods.

Example:
GDS+11'

5. Segments Layout

Segment number: 66

SG25	- C	9999 -	CNI-DTM-CNT-TSR-MOA-FTX-SG31-SG32-SG33-SG38-SG43-SG50-SG70
SG50	- C	999 -	GID-HAN-TMP-RNG-MOA-PIA-FTX-SG51-GDS-SG52-SG53-SG54-SG55-SG56-SG61-SG65
SG52	- C	99 -	MEA-EQN
MEA	- M	1 -	Measurements

Function:

To specify physical measurements, including dimension tolerances, weights and counts.

		EDIFACT	GS1	*	Description
6311	Measurement purpose code qualifier	M an..3	**M**		AAE = Measurement LMT = Loading metre
C502	MEASUREMENT DETAILS	C	**A**		
6313	Measured attribute code	C an..3	**A**		AAB = Unit gross weight AAW = Gross volume G = Gross weight AFF = Gross measure cube LN = Length dimension NPP = Number of pallet places (GS1 Temporary Code) PMC = Package net measurement cube (GS1 Temporary Code) T = Tare weight This qualifier determines the measurement value to be applied either to one single despatch unit of the goods item or to a number of despatch units of the goods item. When Unit Gross Weight is provided in this segment the measurement provided relates to the total gross weight of one single despatch unit in the goods item. The number of despatch units of the goods item that all have the same quoted gross weight is specified in the EQN segment when different from the number of despatch units specified in the GID segment. When Gross Weight is provided the measurement relates to the total gross weight of a number of despatch units in the goods item. The number of despatch units of the goods item that together have the quoted gross weight is specified in the EQN segment when different from the number of despatch units specified in the GID segment.
6321	Measurement significance code	C an..3	**O**		3 = Approximately 4 = Equal to
6155	Non-discrete measurement name code	C an..17	**N**		
6154	Non-discrete measurement name	C an..70	**N**		
C174	VALUE/RANGE	C	**R**		
6411	Measurement unit code	M an..3	**M**		MTR = metre MTQ = cubic metre KGM = kilogram LTR = litre H87 = Piece
6314	Measurement value	C an..18	**O**		

5. Segments Layout

Segment number: 66

		EDIFACT	GS1	*	Description
6162	Range minimum value	C n..18	**O**		
6152	Range maximum value	C n..18	**O**		
6432	Significant digits quantity	C n..2	**O**		
7383	Surface or layer code	C an..3	**N**		

Segment Notes:

This segment is used to specify a measurement for the goods identified in the GID segment. All measurements given in the MEA segments relate to the highest level of packaging (the despatch units) identified in the GID segment.

Example:
MEA+AAE+G+KGM:1600'

5. Segments Layout

Segment number: 67

SG25	- C	9999	-	CNI-DTM-CNT-TSR-MOA-FTX-SG31-SG32-SG33-SG38-SG43-SG50-SG70
SG50	- C	999	-	GID-HAN-TMP-RNG-MOA-PIA-FTX-SG51-GDS-SG52-SG53-SG54-SG55-SG56-SG61-SG65
SG52	- C	99	-	MEA-EQN
EQN	- C	1	-	Number of units

Function:

To specify the number of units.

		EDIFACT	GS1	*	Description
C523	NUMBER OF UNIT DETAILS	M	**M**		
6350	Units quantity	C n..15	**R**		
6353	Unit type code qualifier	C an..3	**N**		

Segment Notes:

This segment is used to specify the number of packages (despatch units) within the goods item to which the measurement applies.

Example:
EQN+10'

5. Segments Layout

Segment number: 68

SG25	- C	9999 -	CNI-DTM-CNT-TSR-MOA-FTX-SG31-SG32-SG33-SG38-SG43-SG50-SG70
SG50	- C	999 -	GID-HAN-TMP-RNG-MOA-PIA-FTX-SG51-GDS-SG52-SG53-SG54-SG55-SG56-SG61-SG65
SG53	- C	99 -	DIM-EQN
DIM	- M	1 -	Dimensions

Function:

To specify dimensions.

		EDIFACT	GS1	*	Description
6145	Dimension type code qualifier	M an..3	**M**	*	1 = Gross dimensions 10E = Unit gross dimensions (GS1 Temporary Code) This qualifier determines the dimension values to be applied either to one single despatch unit of the goods item or to a number of despatch units of the goods item. When Unit Gross Dimensions are provided in this segment the dimension values provided relate to the total gross dimensions of one single despatch unit in the goods item. The number of despatch units of the goods item that all have the same quoted gross dimensions is specified in the EQN segment when different from the number of despatch units specified in the GID segment. When Gross Dimensions are provided the dimension values relate to the total gross weight of a number of despatch units in the goods item. The number of despatch units of the goods item that together have the quoted gross dimension is specified in the EQN segment when different from the number of despatch units specified in the GID segment.
C211	DIMENSIONS	M	**M**		
6411	Measurement unit code	M an..3	**M**		MTR = metre
6168	Length dimension value	C n..15	**O**		
6140	Width dimension value	C n..15	**O**		
6008	Height dimension value	C n..15	**O**		

Segment Notes:

This segment is used to indicate the dimensions of the goods item identified in the GID segment. All dimensions given in the DIM segments relate to the highest level packaging (the despatch units) identified in the GID segment.

Example:
DIM+1+MTR:4:2:2'

5. Segments Layout

Segment number: 69

SG25	- C	9999	-	CNI-DTM-CNT-TSR-MOA-FTX-SG31-SG32-SG33-SG38-SG43-SG50-SG70
SG50	- C	999	-	GID-HAN-TMP-RNG-MOA-PIA-FTX-SG51-GDS-SG52-SG53-SG54-SG55-SG56-SG61-SG65
SG53	- C	99	-	DIM-EQN
EQN	- C	1	-	Number of units

Function:

To specify the number of units.

		EDIFACT	GS1	*	Description
C523	NUMBER OF UNIT DETAILS	M	**M**		
6350	Units quantity	C n..15	**R**		The value expressed in this data element must be the sum of all the values of DE 7224 in the first occurence of C213 in the GID segment throughout the message.
6353	Unit type code qualifier	C an..3	**N**		

Segment Notes:

This segment is used to specify the number of packages (despatch units) within the goods items to which the dimensions apply.

Example:
EQN+40'

5. Segments Layout

Segment number: 70

SG25	- C	9999	-	CNI-DTM-CNT-TSR-MOA-FTX-SG31-SG32-SG33-SG38-SG43-SG50-SG70
SG50	- C	999	-	GID-HAN-TMP-RNG-MOA-PIA-FTX-SG51-GDS-SG52-SG53-SG54-SG55-SG56-SG61-SG65
SG54	- C	9	-	RFF-DTM
RFF	- M	1	-	Reference

Function:

To specify a reference.

		EDIFACT	GS1	*	Description
C506	REFERENCE	M	**M**		
1153	Reference code qualifier	M an..3	**M**		CT = Contract number
1154	Reference identifier	C an..70	**R**		
1156	Document line identifier	C an..6	**N**		
4000	Reference version identifier	C an..35	**N**		
1060	Revision identifier	C an..6	**N**		

Segment Notes:

This segment is used to specify references which are applicable to the current goods item only. The references specified will override those provided in group 32 when the same qualifier is used.

Example:
RFF+CT:52441'

5. Segments Layout

Segment number: 71

SG25	- C	9999	-	CNI-DTM-CNT-TSR-MOA-FTX-SG31-SG32-SG33-SG38-SG43-SG50-SG70
SG50	- C	999	-	GID-HAN-TMP-RNG-MOA-PIA-FTX-SG51-GDS-SG52-SG53-SG54-SG55-SG56-SG61-SG65
SG54	- C	9	-	RFF-DTM
DTM	- C	9	-	Date/time/period

Function:

To specify date, and/or time, or period.

		EDIFACT	GS1	*	Description
C507	DATE/TIME/PERIOD	M	**M**		
2005	Date or time or period function code qualifier	M an..3	**M**	*	171 = Reference date/time
2380	Date or time or period value	C an..35	**R**		
2379	Date or time or period format code	C an..3	**R**		102 = CCYYMMDD

Segment Notes:

This segment is used to indicate dates relevant to the references specified in the previous RFF segment.

Example:
DTM+171:19960110:102'

5. Segments Layout

Segment number: 72

SG25	- C	9999 -	CNI-DTM-CNT-TSR-MOA-FTX-SG31-SG32-SG33-SG38-SG43-SG50-SG70
SG50	- C	999 -	GID-HAN-TMP-RNG-MOA-PIA-FTX-SG51-GDS-SG52-SG53-SG54-SG55-SG56-SG61-SG65
SG55	- C	999 -	PCI-GIN
PCI	- M	1 -	Package identification

Function:

To specify markings and labels on individual packages or physical units.

		EDIFACT	GS1	*	Description
4233	Marking instructions code	C an..3	**R**		17 = Supplier's instructions 18 = Carrier's instructions 33E = Marked with serial shipping container code (GS1 Temporary Code)
C210	MARKS & LABELS	C	**O**		
7102	Shipping marks description	M an..35	**M**		
7102	Shipping marks description	C an..35	**O**		
7102	Shipping marks description	C an..35	**O**		
7102	Shipping marks description	C an..35	**O**		
7102	Shipping marks description	C an..35	**O**		
7102	Shipping marks description	C an..35	**O**		
7102	Shipping marks description	C an..35	**O**		
7102	Shipping marks description	C an..35	**O**		
7102	Shipping marks description	C an..35	**O**		
7102	Shipping marks description	C an..35	**O**		
8275	Container or package contents indicator code	C an..3	**N**		
C827	TYPE OF MARKING	C	**N**		
7511	Marking type code	M an..3			
1131	Code list identification code	C an..17			
3055	Code list responsible agency code	C an..3			

Segment Notes:

This segment is used to specify what markings and labels are marked on the packaging of the current goods item.

Example:
PCI+33E'

5. Segments Layout

Segment number: 73

SG25	- C	9999	-	CNI-DTM-CNT-TSR-MOA-FTX-SG31-SG32-SG33-SG38-SG43-SG50-SG70
SG50	- C	999	-	GID-HAN-TMP-RNG-MOA-PIA-FTX-SG51-GDS-SG52-SG53-SG54-SG55-SG56-SG61-SG65
SG55	- C	999	-	PCI-GIN
GIN	- C	9	-	Goods identity number

Function:

To give specific identification numbers, either as single numbers or ranges.

		EDIFACT	GS1	*	Description
7405	Object identification code qualifier	M an..3	**M**	*	BJ = Serial shipping container code In EANCOM it is recommended to use the Serial Shipping Container Code (SSCC) for the unique identification of individual transport packages.
C208	IDENTITY NUMBER RANGE	M	**M**		
7402	Object identifier	M an..35	**M**		
7402	Object identifier	C an..35	**O**		
C208	IDENTITY NUMBER RANGE	C	**O**		
7402	Object identifier	M an..35	**M**		
7402	Object identifier	C an..35	**O**		
C208	IDENTITY NUMBER RANGE	C	**O**		
7402	Object identifier	M an..35	**M**		
7402	Object identifier	C an..35	**O**		
C208	IDENTITY NUMBER RANGE	C	**O**		
7402	Object identifier	M an..35	**M**		
7402	Object identifier	C an..35	**O**		
C208	IDENTITY NUMBER RANGE	C	**O**		
7402	Object identifier	M an..35	**M**		
7402	Object identifier	C an..35	**O**		

Segment Notes:

This segment is used to provide the Serial Shipping Container Code which has been marked on the packaging of the current goods item.

Example:
GIN+BJ+354123450000000014'

5. Segments Layout

Segment number: 74

SG25	- C	9999 -	CNI-DTM-CNT-TSR-MOA-FTX-SG31-SG32-SG33-SG38-SG43-SG50-SG70
SG50	- C	999 -	GID-HAN-TMP-RNG-MOA-PIA-FTX-SG51-GDS-SG52-SG53-SG54-SG55-SG56-SG61-SG65
SG56	- C	9 -	DOC-DTM
DOC	- M	1 -	Document/message details

Function:

To identify documents and details directly related to it.

		EDIFACT	GS1	*	Description
C002	DOCUMENT/MESSAGE NAME	M	**M**		
1001	Document name code	C an..3	**R**		811 = Export licence 911 = Import licence
1131	Code list identification code	C an..17	**O**		
3055	Code list responsible agency code	C an..3	**D**		
1000	Document name	C an..35	**N**		
C503	DOCUMENT/MESSAGE DETAILS	C	**O**		
1004	Document identifier	C an..35	**R**		
1373	Document status code	C an..3	**O**		2 = Accompanying goods 9 = To be printed 17 = Document with the goods
1366	Document source description	C an..70	**O**		
3453	Language name code	C an..3	**O**		ISO 639 two alpha
1056	Version identifier	C an..9	**N**		
1060	Revision identifier	C an..6	**N**		
3153	Communication medium type code	C an..3	**N**		
1220	Document copies required quantity	C n..2	**O**		
1218	Document originals required quantity	C n..2	**O**		

Segment Notes:

This segment is used to specify documents which are required for the current goods item only and which must accompany the goods during transport.

Example:
DOC+811+52441'

5. Segments Layout

Segment number: 75

SG25	- C	9999 -	CNI-DTM-CNT-TSR-MOA-FTX-SG31-SG32-SG33-SG38-SG43-SG50-SG70
SG50	- C	999 -	GID-HAN-TMP-RNG-MOA-PIA-FTX-SG51-GDS-SG52-SG53-SG54-SG55-SG56-SG61-SG65
SG56	- C	9 -	DOC-DTM
DTM	- C	9 -	Date/time/period

Function:

To specify date, and/or time, or period.

		EDIFACT	GS1	*	Description
C507	DATE/TIME/PERIOD	M	**M**		
2005	Date or time or period function code qualifier	M an..3	**M**	*	7 = Effective date/time 36 = Expiry date 137 = Document/message date/time 273 = Validity period
2380	Date or time or period value	C an..35	**R**		
2379	Date or time or period format code	C an..3	**R**		102 = CCYYMMDD 203 = CCYYMMDDHHMM 718 = CCYYMMDD-CCYYMMDD

Segment Notes:

This segment is used to specify dates relating to the documents identified in the previous DOC segment.

Example:
DTM+36:19940101:102'

5. Segments Layout

Segment number: 76

SG25	- C	9999	-	CNI-DTM-CNT-TSR-MOA-FTX-SG31-SG32-SG33-SG38-SG43-SG50-SG70
SG50	- C	999	-	GID-HAN-TMP-RNG-MOA-PIA-FTX-SG51-GDS-SG52-SG53-SG54-SG55-SG56-SG61-SG65
SG61	- C	999	-	SGP
SGP	- M	1	-	Split goods placement

Function:

To specify the placement of goods in relation to equipment.

		EDIFACT	GS1	*	Description
C237	EQUIPMENT IDENTIFICATION	M	**M**		
8260	Equipment identifier	C an..17	**R**		The value in DE 8260 indicates the identity number of the equipment in/on which the goods item is transported.
1131	Code list identification code	C an..17	**O**		
3055	Code list responsible agency code	C an..3	**D**		
3207	Country name code	C an..3	**O**		ISO 3166 two alpha code
7224	Package quantity	C n..8	**O**		

Segment Notes:

This segment is used to specify the placement of the goods item within the equipment used for its transportation.

Example:
SGP+AS-12388'

5. Segments Layout

Segment number: 77

SG25	- C	9999 -	CNI-DTM-CNT-TSR-MOA-FTX-SG31-SG32-SG33-SG38-SG43-SG50-SG70
SG50	- C	999 -	GID-HAN-TMP-RNG-MOA-PIA-FTX-SG51-GDS-SG52-SG53-SG54-SG55-SG56-SG61-SG65
SG65	- C	99 -	DGS-FTX-SG66-SG67
DGS	- M	1 -	Dangerous goods

Function:

To identify dangerous goods.

		EDIFACT	GS1	*	Description
8273	Dangerous goods regulations code	C an..3	**O**		ADR = European agreement regarding the total carriage of dangerous goods CFR = 49 code of federal regulations RID = Rail/road dangerous goods book (RID)
C205	HAZARD CODE	C	**O**		
8351	Hazard identification code	M an..7	**M**		Classification according ADR/RID rules
8078	Additional hazard classification identifier	C an..7	**O**		Additional according ADR/RID rules
8092	Hazard code version identifier	C an..10	**O**		
C234	UNDG INFORMATION	C	**O**		
7124	United Nations Dangerous Goods (UNDG) identifier	C n4	**O**		
7088	Dangerous goods flashpoint value	C an..8	**O**		Declaration of the flashpoint.
C223	DANGEROUS GOODS SHIPMENT FLASHPOINT	C	**O**		
7106	Shipment flashpoint value	C n3	**O**		
6411	Measurement unit code	C an..3	**O**		CEL = degree celsius
8339	Packaging danger level code	C an..3	**O**		1 = Great danger 2 = Medium danger 3 = Minor danger
8364	Emergency procedure for ships identifier	C an..6	**O**		Only for emergency procedure on ships.
8410	Hazard medical first aid guide identifier	C an..4	**O**		
8126	Transport emergency card identifier	C an..10	**O**		TREM card number according ADR.
C235	HAZARD IDENTIFICATION PLACARD DETAILS	C	**O**		
8158	Orange hazard placard upper part identifier	C an..4	**O**		Danger signs upper part.
8186	Orange hazard placard lower part identifier	C an4	**O**		Danger signs lower part.
C236	DANGEROUS GOODS LABEL	C	**O**		According ADR, FID, IMDG-code, IATA-DGR.
8246	Dangerous goods marking identifier	C an..4	**O**		Number of dangerous goods document primary hazard.
8246	Dangerous goods marking identifier	C an..4	**O**		Number of dangerous goods document secondary hazard.

5. Segments Layout

Segment number: 77

		EDIFACT	GS1	*	Description
8246	Dangerous goods marking identifier	C an..4	**O**		
8255	Packing instruction type code	C an..3	**O**		
8325	Hazardous means of transport category code	C an..3	**O**		Only used by air carrier.
8211	Hazardous cargo transport authorisation code	C an..3	**O**		

Segment Notes:

This segment is used to indicate whether the current goods item is considered a dangerous good.

Example:
DGS+ADR+3B+1178+021:CEL'

5. Segments Layout

Segment number: 78

SG25	- C	9999 -	CNI-DTM-CNT-TSR-MOA-FTX-SG31-SG32-SG33-SG38-SG43-SG50-SG70
SG50	- C	999 -	GID-HAN-TMP-RNG-MOA-PIA-FTX-SG51-GDS-SG52-SG53-SG54-SG55-SG56-SG61-SG65
SG65	- C	99 -	DGS-FTX-SG66-SG67
FTX	- C	99 -	Free text

Function:

To provide free form or coded text information.

		EDIFACT	GS1	*	Description
4451	Text subject code qualifier	M an..3	**M**		AAC = Dangerous goods additional information AAD = Dangerous goods, technical name
4453	Free text function code	C an..3	**O**		1 = Text for subsequent use
C107	TEXT REFERENCE	C	**D**		This composite is only used when trading partners have agreed to use mutually defined code values.
4441	Free text value code	M an..17	**M**		
1131	Code list identification code	C an..17	**O**		
3055	Code list responsible agency code	C an..3	**D**		89 = Assigned by distributor 90 = Assigned by manufacturer 91 = Assigned by supplier or supplier's agent 92 = Assigned by buyer or buyer's agent
C108	TEXT LITERAL	C	**D**		This composite is only used if coded text can not be used.
4440	Free text value	M an..512	**M**		
4440	Free text value	C an..512	**O**		
4440	Free text value	C an..512	**O**		
4440	Free text value	C an..512	**O**		
4440	Free text value	C an..512	**O**		
3453	Language name code	C an..3	**D**		ISO 639 two alpha code This data element is only used when non coded free text has been provided in data element C108.
4447	Free text format code	C an..3	**N**		

Segment Notes:

This segment is used to specify any additional information required for the dangerous goods.
Use of this segment in free form is not recommended since it may inhibit automatic processing of the Forwarding and Consolidation Summary. Coded references to standard texts is an available functionality which enables automatic processing and reduces transmission overheads. Standard texts should be mutually defined between trading partners and can be used to cover legal or other requirements.

Example:
FTX+AAC+++DIETHYL ACETALDEHYDE'

5. Segments Layout

Segment number: 79

SG25	- C	9999 -	CNI-DTM-CNT-TSR-MOA-FTX-SG31-SG32-SG33-SG38-SG43-SG50-SG70
SG50	- C	999 -	GID-HAN-TMP-RNG-MOA-PIA-FTX-SG51-GDS-SG52-SG53-SG54-SG55-SG56-SG61-SG65
SG65	- C	99 -	DGS-FTX-SG66-SG67
SG66	- C	9 -	CTA-COM
CTA	- M	1 -	Contact information

Function:

To identify a person or a department to whom communication should be directed.

		EDIFACT	GS1	*	Description
3139	Contact function code	C an..3	**R**		HE = Emergency dangerous goods contact HG = Dangerous goods contact
C056	DEPARTMENT OR EMPLOYEE DETAILS	C	**O**		
3413	Department or employee name code	C an..17	**O**		
3412	Department or employee name	C an..35	**O**		

Segment Notes:

This segment is used to specify a contact name relating to the dangerous goods identified in the DGS segment.

Example:
CTA+HG+:J REEVES'

5. Segments Layout

Segment number: 80

SG25	- C	9999	-	CNI-DTM-CNT-TSR-MOA-FTX-SG31-SG32-SG33-SG38-SG43-SG50-SG70
SG50	- C	999	-	GID-HAN-TMP-RNG-MOA-PIA-FTX-SG51-GDS-SG52-SG53-SG54-SG55-SG56-SG61-SG65
SG65	- C	99	-	DGS-FTX-SG66-SG67
SG66	- C	9	-	CTA-COM
COM	- C	9	-	Communication contact

Function:

To identify a communication number of a department or a person to whom communication should be directed.

		EDIFACT	GS1	*	Description
C076	COMMUNICATION CONTACT	M	**M**		
3148	Communication address identifier	M an..512	**M**		
3155	Communication address code qualifier	M an..3	**M**		EM = Electronic mail TE = Telephone WWW = WWW-Site (GS1 Temporary Code)

Segment Notes:

This segment identifies the communications number and type of communications for the person or department identified in the previous CTA segment.

Example:
COM+0033148759632:TE'

5. Segments Layout

Segment number: 81

SG25	- C	9999 -	CNI-DTM-CNT-TSR-MOA-FTX-SG31-SG32-SG33-SG38-SG43-SG50-SG70
SG50	- C	999 -	GID-HAN-TMP-RNG-MOA-PIA-FTX-SG51-GDS-SG52-SG53-SG54-SG55-SG56-SG61-SG65
SG65	- C	99 -	DGS-FTX-SG66-SG67
SG67	- C	9 -	MEA-EQN
MEA	- M	1 -	Measurements

Function:

To specify physical measurements, including dimension tolerances, weights and counts.

		EDIFACT	GS1	*	Description
6311	Measurement purpose code qualifier	M an..3	**M**		AAE = Measurement
C502	MEASUREMENT DETAILS	C	**A**		
6313	Measured attribute code	C an..3	**A**		G = Gross weight
6321	Measurement significance code	C an..3	**O**		3 = Approximately 4 = Equal to
6155	Non-discrete measurement name code	C an..17	**N**		
6154	Non-discrete measurement name	C an..70	**N**		
C174	VALUE/RANGE	C	**R**		
6411	Measurement unit code	M an..3	**M**		KGM = kilogram LTR = litre
6314	Measurement value	C an..18	**O**		
6162	Range minimum value	C n..18	**O**		
6152	Range maximum value	C n..18	**N**		
6432	Significant digits quantity	C n..2	**O**		
7383	Surface or layer code	C an..3	**N**		

Segment Notes:

This segment is used to indicate a measurement of the current dangerous goods item.

Example:
MEA+AAE+G:4+LTR:500'

5. Segments Layout

Segment number: 82

SG25	- C	9999	-	CNI-DTM-CNT-TSR-MOA-FTX-SG31-SG32-SG33-SG38-SG43-SG50-SG70
SG50	- C	999	-	GID-HAN-TMP-RNG-MOA-PIA-FTX-SG51-GDS-SG52-SG53-SG54-SG55-SG56-SG61-SG65
SG65	- C	99	-	DGS-FTX-SG66-SG67
SG67	- C	9	-	MEA-EQN
EQN	- C	1	-	Number of units

Function:

To specify the number of units.

		EDIFACT	GS1	*	Description
C523	NUMBER OF UNIT DETAILS	M	**M**		
6350	Units quantity	C n..15	**R**		
6353	Unit type code qualifier	C an..3	**N**		

Segment Notes:

This segment is used to indicate the number of units to which the dangerous goods measurements apply.

Example:
EQN+1'

5. Segments Layout

Segment number: 83

SG25	- C	9999 -	CNI-DTM-CNT-TSR-MOA-FTX-SG31-SG32-SG33-SG38-SG43-SG50-SG70
SG70	- C	999 -	EQD-EQN-MEA-DIM-SEL-SG72
EQD	- M	1 -	Equipment details

Function:

To identify a unit of equipment.

		EDIFACT	GS1	*	Description
8053	Equipment type code qualifier	M an..3	**M**		CN = Container PA = Pallet UL = ULD (Unit load device) BPN = Box pallet non exchangeable EFP = Exchangeable EUR flat pallet
C237	EQUIPMENT IDENTIFICATION	C	**A**		
8260	Equipment identifier	C an..17	**A**		The positioning of goods items within equipment in a consignment is controlled through a link with the SGP segment using the DE 8260. DE 8260 in the EQD segment should have the same value as that specified in the SGP segment (DE 8260) in the applicable goods item group to establish the link.
1131	Code list identification code	C an..17	**O**		
3055	Code list responsible agency code	C an..3	**D**		9 = GS1
3207	Country name code	C an..3	**O**		
C224	EQUIPMENT SIZE AND TYPE	C	**O**		
8155	Equipment size and type description code	C an..10	**O**		6 = Pressurized tank 21 = Container IC 20 ft.
1131	Code list identification code	C an..17	**O**		
3055	Code list responsible agency code	C an..3	**D**		
8154	Equipment size and type description	C an..35	**O**		
8077	Equipment supplier code	C an..3	**O**		1 = Shipper supplied 2 = Carrier supplied
8249	Equipment status code	C an..3	**O**		
8169	Full or empty indicator code	C an..3	**O**		4 = Empty 5 = Full

Segment Notes:

This segment is used to indicate the units of equipment which will be used to transport the current consignment.

Example:
EQD+UL+45223'

5. Segments Layout

Segment number: 84

SG25	- C	9999	-	CNI-DTM-CNT-TSR-MOA-FTX-SG31-SG32-SG33-SG38-SG43-SG50-SG70
SG70	- C	999	-	EQD-EQN-MEA-DIM-SEL-SG72
EQN	- C	1	-	Number of units

Function:

To specify the number of units.

		EDIFACT	GS1	*	Description
C523	NUMBER OF UNIT DETAILS	M	**M**		
6350	Units quantity	C n..15	**R**		
6353	Unit type code qualifier	C an..3	**N**		

Segment Notes:

This segment is used to specify the number of pieces of equipment required.

Example:
EQN+10'

5. Segments Layout

Segment number: 85

SG25	- C	9999 -	CNI-DTM-CNT-TSR-MOA-FTX-SG31-SG32-SG33-SG38-SG43-SG50-SG70
SG70	- C	999 -	EQD-EQN-MEA-DIM-SEL-SG72
MEA	- C	9 -	Measurements

Function:

To specify physical measurements, including dimension tolerances, weights and counts.

		EDIFACT	GS1	*	Description
6311	Measurement purpose code qualifier	M an..3	**M**		AAE = Measurement
C502	MEASUREMENT DETAILS	C	**A**		
6313	Measured attribute code	C an..3	**A**		G = Gross weight T = Tare weight
6321	Measurement significance code	C an..3	**O**		3 = Approximately 4 = Equal to
6155	Non-discrete measurement name code	C an..17	**O**		
6154	Non-discrete measurement name	C an..70	**N**		
C174	VALUE/RANGE	C	**R**		
6411	Measurement unit code	M an..3	**M**		KGM = kilogram TNE = tonne (metric ton)
6314	Measurement value	C an..18	**O**		
6162	Range minimum value	C n..18	**N**		
6152	Range maximum value	C n..18	**N**		
6432	Significant digits quantity	C n..2	**N**		
7383	Surface or layer code	C an..3	**N**		

Segment Notes:

This segment is used to specify the physical dimensions of the equipment identified in the preceding EQD segment.

Example:
MEA+AAE+G+TNE:5622'

5. Segments Layout

Segment number: 86

SG25	- C	9999 -	CNI-DTM-CNT-TSR-MOA-FTX-SG31-SG32-SG33-SG38-SG43-SG50-SG70
SG70	- C	999 -	EQD-EQN-MEA-DIM-SEL-SG72
DIM	- C	9 -	Dimensions

Function:

To specify dimensions.

		EDIFACT	GS1	*	Description
6145	Dimension type code qualifier	M an..3	**M**		1 = Gross dimensions
C211	DIMENSIONS	M	**M**		
6411	Measurement unit code	M an..3	**M**		CMT = centimetre MTR = metre
6168	Length dimension value	C n..15	**O**		
6140	Width dimension value	C n..15	**O**		
6008	Height dimension value	C n..15	**O**		

Segment Notes:

This segment is used to indicate the dimensions of the equipment identified in the EQD segment.

Example:
DIM+1+CMT:2:2:1'

5. Segments Layout

Segment number: 87

SG25	- C	9999 -	CNI-DTM-CNT-TSR-MOA-FTX-SG31-SG32-SG33-SG38-SG43-SG50-SG70
SG70	- C	999 -	EQD-EQN-MEA-DIM-SEL-SG72
SEL	- C	99 -	Seal number

Function:

To specify the seal number or a range of seal numbers.

		EDIFACT	GS1	*	Description
9308	Seal identifier	C an..35	**R**		
C215	SEAL ISSUER	C	**R**		
9303	Sealing party name code	C an..3	**R**		CA = Carrier CU = Customs SH = Shipper
1131	Code list identification code	C an..17	**O**		
3055	Code list responsible agency code	C an..3	**D**		
9302	Sealing party name	C an..35	**O**		
4517	Seal condition code	C an..3	**O**		
C208	IDENTITY NUMBER RANGE	C	**N**		
7402	Object identifier	M an..35			
7402	Object identifier	C an..35			

Segment Notes:

This segment is used to specify a seal number, and the party applying the seal, for the equipment identified in the EQD segment.

Example:
SEL+96753+SH'

Dependency Notes:
The use of the SEL segment in the segment group 21 respectively 70 is recommended. Only if customs seals are involved in particular transport environments such as bonded goods the SEL segment in the segment group 33 should be used.

5. Segments Layout

Segment number: 88

SG25	- C	9999 -	CNI-DTM-CNT-TSR-MOA-FTX-SG31-SG32-SG33-SG38-SG43-SG50-SG70
SG70	- C	999 -	EQD-EQN-MEA-DIM-SEL-SG72
SG72	- C	9 -	NAD
NAD	- M	1 -	Name and address

Function:

To specify the name/address and their related function, either by C082 only and/or unstructured by C058 or structured by C080 thru 3207.

		EDIFACT	GS1	*	Description
3035	Party function code qualifier	M an..3	**M**		CK = Empty equipment despatch party CR = Empty equipment return party
C082	PARTY IDENTIFICATION DETAILS	C	**A**		
3039	Party identifier	M an..35	**M**		GLN - Format n13 For identification of parties it is recommended to use GLN - Format n13.
1131	Code list identification code	C an..17	**N**		
3055	Code list responsible agency code	C an..3	**R**		9 = GS1
C058	NAME AND ADDRESS	C	**O**		This composite may only be used to fulfill the requirements of directive 2003/58/EC, article 4.
3124	Name and address description	M an..35	**M**		
3124	Name and address description	C an..35	**O**		
3124	Name and address description	C an..35	**O**		
3124	Name and address description	C an..35	**O**		
3124	Name and address description	C an..35	**O**		
C080	PARTY NAME	C	**D**		
3036	Party name	M an..35	**M**		Party Name in clear text.
3036	Party name	C an..35	**O**		
3036	Party name	C an..35	**O**		
3036	Party name	C an..35	**O**		
3036	Party name	C an..35	**O**		
3045	Party name format code	C an..3	**O**		
C059	STREET	C	**D**		
3042	Street and number or post office box identifier	M an..35	**M**		Building Name/Number and Street
3042	Street and number or post office box identifier	C an..35	**O**		Name and/or P.O. Box
3042	Street and number or post office box identifier	C an..35	**O**		
3042	Street and number or post office box identifier	C an..35	**O**		
3164	City name	C an..35	**D**		City/Town, clear text.
C819	COUNTRY SUB-ENTITY DETAILS	C	**D**		
3229	Country sub-entity name code	C an..9	**O**		

5. Segments Layout

Segment number: 88

		EDIFACT	GS1	*	Description
1131	Code list identification code	C an..17	**O**		
3055	Code list responsible agency code	C an..3	**O**		
3228	Country sub-entity name	C an..70	**O**		County/State, clear text.
3251	Postal identification code	C an..17	**D**		Postal Code
3207	Country name code	C an..3	**D**		ISO 3166 two alpha code

Segment Notes:

This segment is used to specify pick up or drop off parties for the equipment specified in the EQD segment.

Example:
NAD+CK+3323456007896::9'

Dependency Notes:
The following composites and data elements are only used when a coded name and address can not be used.
The affected composites and data elements are as follows:
C080 - C059 - 3164 - C819 - 3251 - 3207

5. Segments Layout

Segment number: 89

UNT - M 1 - Message trailer					
Function: To end and check the completeness of a message.					
		EDIFACT	GS1	*	Description
0074	Number of segments in the message	M n..6	**M**		The total number of segments in the message is detailed here.
0062	Message reference number	M an..14	**M**		The message reference numbered detailed here should equal the one specified in the UNH segment.
Segment Notes: This segment is a mandatory UN/EDIFACT segment. It must always be the last segment in the message. Example: UNT+89+ME000001'					

6. Examples

The following is an example of a forwarding and consolidation summary transport instruction message from a consignor identified by GLN 5412345123450 to a carrier identified with GLN 5411234512300. The message is identified by the number 9952 and is dated the 1st of March 2002.

The consolidation contains the following consignments;

Shipment Ref No	Delivery Date	Consignee	Goods Item	Delivery Party
221	2002/03/08	5087654111110	4 Cartons of Food Stuffs	5087654525252
281	2002/03/08		12 Cartons of Food Stuffs 8 Cartons of Detergents	5087654525269
140	2002/03/08		6 Cartons of Food Stuffs	5087654511118
201	2002/03/08	5480011222229	6 Cartons of Food Stuffs	5480011000018
266	2002/03/08		120 Cartons of Food Stuffs	5480011000025

UNH+ME000001+IFCSUM:D:01B:UN:EAN004'	Message header
BGM+610+9952+9'	IFCSUM message number 9952
DTM+137:20020301:102'	Message date
CNT+10:5'	There are 5 consignments consolidated in the message
RFF+CU:TI1284'	Consignors reference number for the message is TI1284
TDT+20++30+31'	Main carriage transport for the consolidated consignments is to be a truck
NAD+CZ+5412345123450::9'	The consignor is identified by GLN 5412345123450
NAD+CA+5411234512300::9'	The carrier is identified by GLN 5411234512300
CNI+1+221'	The first consignment to be consolidated has a shipment reference number of 221
DTM+2:20020308:102'	The delivery date requested is the 8th of March 2002
CNT+11:4'	The total number of packages in the consignment is 4
NAD+CN+5087654111110::9'	Consignee is identified by GLN 5087654111110
GID+1+4:CT'	The goods item in consignment number 1 is 4 cartons
FTX+AAA+++FOODS STUFFS'	of food stuffs
NAD+DP+5087654525252::9'	Delivery party is identified by GLN 5087654525252
CNI+2+281'	The second consignment to be consolidated has a shipment reference number of 281

DTM+2:20020308:102'	The delivery date requested is the 8th of March 2002
CNT+11:20'	The total number of packages in the consignment is 20
NAD+CN+5087654111110::9'	Consignee is identified by GLN 5087654111110
GID+1+12:CT'	The first goods item in consignment number 2 is 12 cartons
FTX+AAA+++FOODS STUFFS'	of food stuffs
NAD+DP+5087654525269::9'	Delivery party is identified by GLN 5087654525269
GID+2+8:CT'	The second goods item in consignment number 2 is 8 cartons
FTX+AAA+++DETERGENTS'	of detergents
NAD+DP+5087654525269::9'	Delivery party is identified by GLN 5087654525269
CNI+3+140'	The third consignment to be consolidated has a shipment reference number of 140
DTM+2:20020308:102'	The delivery date requested is the 8th of March 2002
CNT+11:6'	The total number of packages in the consignment is 6
NAD+CN+5087654111110::9'	Consignee is identified by GLN 5087654111110
GID+1+6:CT'	The first goods item in consignment number 3 is 6 cartons
FTX+AAA+++FOODS STUFFS'	of food stuffs
NAD+DP+5087654111118::9'	Delivery party is identified by GLN 5087654111118
CNI+4+204'	The fourth consignment to be consolidated has a shipment reference number of 204
DTM+2:20020308:102'	The delivery date requested is the 8th of March 2002
CNT+11:6'	The total number of packages in the consignment is 6
NAD+CN+5480011222229::9'	Consignee is identified by GLN 5480011222229
GID+1+6:CT'	The first goods item in consignment number 4 is 6 cartons
FTX+AAA+++FOODS STUFFS'	of food stuffs
NAD+DP+5480011000018::9'	Delivery party is identified by GLN 5480011000018
CNI+5+266'	The fifth consignment to be consolidated has a shipment reference number of 266

6. Examples

DTM+2:20020308:102'	The delivery date requested is the 8th of March 2002
CNT+11:120'	The total number of packages in the consignment is 120
NAD+CN+5480011222229::9'	Consignee is identified by GLN 5480011222229
GID+1+120:CT'	The first goods item in consignment number 5 is 120 cartons
FTX+AAA+++FOODS STUFFS'	of food stuffs
NAD+DP+5480011000025::9'	Delivery party is identified by GLN 5480011000025
UNT+47+ME000001'	Total number of segments in the message equals 47

Note :
The EDI interchange will include the UNB..UNZ segments and, if applicable, the UNG..UNE segments (see part I section 5.7).